Finnigan™ LCQ™ Series

Hardware Manual

97345-97003 Revision A

Thermo
ELECTRON CORPORATION

Technical information contained in this publication is for reference purposes only and is subject to change without notice. Every effort has been made to supply complete and accurate information; however, Thermo Electron Corporation assumes no responsibility and will not be liable for any errors, omissions, damage, or loss that might result from any use of this manual or the information contained therein (even if this information is properly followed and problems still arise).

This publication is not part of the Agreement of Sale between Thermo Electron Corporation and the purchaser of an LC/MS system. In the event of any conflict between the provisions of this document and those contained in Thermo Electron Corporation's Terms and Conditions, the provisions of the Terms and Conditions shall govern.

System Configurations and Specifications supersede all previous information and are subject to change without notice.

Printing History: Revision A printed in October 2003

Thermo
ELECTRON CORPORATION

The products of Thermo Electron San Jose are produced under ISO 9001 accredited quality management systems.

Australia: P.O. Box 239 Rydalmere • Unit 14, 38 – 46 South Street • Rydalmere, N.S.W. 2116 • [61] (02) 9898-9000
Austria: Wehlistrasse 27b • A-1200 Wien • [43] (01) 333 50 34-0
Belgium: Technologiestraat 47 • B-1082 Brussels • [32] (02) 482 30 30
Canada: 5716 Coopers Avenue, Unit 1 • Mississauga, Ontario • L4Z 2E8 • [1] (905) 712-2258
France: 16 Avenue du Québec • Silic 765 • Z.A. de Courtaboeuf • F-91963 Les Ulis Cédex • [33] (01) 60 92 48 00
Germany: Im Steingrund 4-6 • D-63303 Dreieich • [49] (06103) 408 0
Italy: Strada Rivoltana • I-20090 Rodano (Milano) • [39] (02) 95059 226
Japan: C-2F • 3-9, Moriya-cho, Kanagawa-ku • Yokohama, Kanagawa • 221-0022 • [81] (45) 453 9100
Japan: Esaka Grand Building • 2-3-1 Esaka-cho, Suita City • Osaka 564-0063 • [81] (06) 6387-6681
Netherlands: Takkebijsters 1 • NL-4817 BL Breda • [31] (076) 5878 722
P.R. China: Room 901, Ping-an Mansion • No. 23, Jin Rong Street • Xi Cheng District • Beijing 100032 • [86] (010) 6621 0839
Spain: Sepulveda 7 A • ES-28108 Alcobendas (Madrid) • [34] (091) 657 4930
Spain: Acer 30 – 32 • Edificio Sertram – Planta 2, Modulo 3 • ES-08038 Barcelona • [34] (093) 223 0918
Sweden: Pyramidbacken 3 • S-141 75 Kungens Kurva (Stockholm) • [46] (08) 556 468 00
United Kingdom: Stafford House • 1 Boundary Park • Boundary Way • Hemel Hempstead • Hertfordshire HP2 7GE • [44] (01442) 233 555
U.S.A.: 355 River Oaks Parkway • San Jose, CA 95134-1991 • [1] (408) 965-6000

Notes: The country code is enclosed in square brackets [ ]. The city code or area code is enclosed in parenthesis ( ). For countries other than the U.S.A., when you are dialing from within the specified country, dial the 0 of the city code. For countries other than Italy, when you are dialing from outside the country, do not dial the 0 of the city code.

Published by Technical Publications, Thermo Electron Corporation, San Jose, California.

Thermo
ELECTRON CORPORATION

Customer Registration... Register now and receive all the privileges associated with being a Thermo Electron, Finnigan product user, including application reports and technical reports.

Name _____

Title _____

Company _____

Address _____

City/State/Postal Code _____

Country _____

Telephone _____ **Ext.** _____

Finnigan LCQ Series System Type (circle one): LCQ Advantage MAX/LCQ Deca XP MAX

Serial #_____ **Date Purchased** _____

Tell us more... Let us know more about how you use this product:

My Organization Is: (Check one only)

- ❑ Commercial (for profit) lab
- ❑ Government lab
- ❑ Hospital / Clinic
- ❑ Research Institute
- ❑ University / College
- ❑ Veterinary
- ❑ Other _____

Job Function: (Check one only)

- ❑ Administration
- ❑ Lab Management
- ❑ Operator
- ❑ Other _____

My Primary Application Is: (Check one only)

- ❑ Analytical
- ❑ Biomedical
- ❑ Clinical / Toxicology
- ❑ Energy
- ❑ Food / Agriculture
- ❑ Forensic / Toxicology
- ❑ Pharmaceutical
- ❑ Research / Education
- ❑ Other _____

Reader Survey... Help us to improve the quality of our documentation by answering a few questions:

Finnigan LCQ Series Hardware Manual — *Revision A 97345-97003*

	Strongly Agree	Agree	Disagree	Strongly Disagree
The manual is well organized.	1	2	3	4
The manual is clearly written.	1	2	3	4
The manual contains all of the information I need.	1	2	3	4
The instructions are easy to follow.	1	2	3	4
The instructions are complete.	1	2	3	4
The technical information is easy to understand.	1	2	3	4
The figures are helpful.	1	2	3	4
I was able to operate the system by using this manual. (If not, please comment below.)	1	2	3	4

Additional Comments: (Attach additional sheets if necessary.)

_____

_____

_____

_____

_____

Tear this sheet from the manual, fold it closed, stamp it, and drop it in the mail.

fold

From _____

_____

_____

Place Stamp Here

EDITOR, TECHNICAL PUBLICATIONS
THERMO ELECTRON SAN JOSE
355 RIVER OAKS PARKWAY
SAN JOSE, CA 95134-1991
UNITED STATES OF AMERICA

fold

Change of Location Card Goes Here

Change of Location Addresses Go Here

Thermo
ELECTRON CORPORATION

Regulatory Compliance

Thermo Electron San Jose performs complete testing and evaluation of its products to ensure full compliance with applicable domestic and international regulations. When your system is delivered to you, it meets all pertinent electromagnetic compatibility (EMC) and safety standards as follows:

EMC Certification

EN 55011	(1998)	EN 61000-4-4	(1995)
EN 61326	(1998)	EN 61000-4-5	(1995)
EN 61000-4-2	(1998)	EN 61000-4-6	(1996)
EN 61000-4-3	(1996)	EN 61000-4-11	(1994)
ENV 50204	(1995)	FCC Class A	

EMC issues have been evaluated by EMC TECHNOLOGY SERVICES, A Subsidiary of UNDERWRITERS LABORATORY, INC (UL)

Safety Compliance

Low Voltage Directive EN 61010-1:2001

Please be aware that any changes that you make to your system may void compliance with one or more of these EMC and/or safety standards.
Making changes to your system includes replacing a part. Thus, to ensure continued compliance with EMC and safety standards, replacement parts should be ordered from Thermo Electron or one of its authorized representatives.

FCC Compliance Statement

Note: This equipment has been tested and found to comply with the limits for a Class A digital device, pursuant to part 15 of the FCC rules. These limits are designed to provide reasonable protection against harmful interference when the equipment is operated in a commercial environment. This equipment generates, uses, and can radiate radio frequency energy. If it is not installed and used in accordance with the instruction manual, it may cause harmful interference to radio communications. Operation of this equipment in a residential area is likely to cause harmful interference. In this case, the user will be required to correct the interference at his/her own expense.

Thermo
ELECTRON CORPORATION

Notice on Lifting and Handling of Thermo Electron San Jose Instruments

For your safety, and in compliance with international regulations, the physical handling of this Thermo Electron San Jose instrument ***requires a team effort*** for lifting and/or moving the instrument. This instrument is too heavy and/or bulky for one person alone to handle safely.

Notice on the Proper Use of Thermo Electron San Jose Instruments

In compliance with international regulations: If this instrument is used in a manner not specified by Thermo Electron San Jose, the protection provided by the instrument could be impaired.

Contents

Read This First

Welcome to the Thermo Electron, Finnigan LCQ™ Series LC/MS/MS system! LCQ Series instruments are members of the Finnigan™ family of MS detectors.

This **Finnigan LCQ Series Hardware Manual** contains a description of the modes of operation and principal hardware components of your LCQ Series system. In addition, this manual provides step-by-step instructions for cleaning and maintaining your LCQ Series MS detector.

The **Finnigan LCQ Series Hardware Manual** includes the following chapters:

Chapter 1: Introduction discusses the ion polarity modes, ionization modes, and scan modes of your LCQ Series system.

Chapter 2: Functional Description describes the principal components of your LCQ Series system and their respective functions.

Chapter 3: Preparing for Daily Operation describes the checks of the LCQ Series system that you should perform every day before you begin your first analysis.

Chapter 4: LCQ Advantage MAX MS Detector Maintenance outlines the maintenance procedures that you should perform on a regular basis to maintain optimum LCQ Advantage MAX MS detector performance.

Chapter 5: LCQ Deca XP MAX MS Detector Maintenance outlines the maintenance procedures that you should perform on a regular basis to maintain optimum LCQ Deca XP MAX MS detector performance.

Chapter 6: System Shutdown, Startup, and Reset provides procedures for shutting down and starting up the LCQ Series system.

Chapter 7: LCQ Advantage MAX Diagnostics and PCB and Assembly Replacement discusses procedures for testing the major electronic circuits within the LCQ Advantage MAX MS detector and for replacing failed PCBs and assemblies.

Chapter 8: LCQ Deca XP MAX Diagnostics and PCB and Assembly Replacement discusses procedures for testing the major electronic circuits within the LCQ Deca XP MAX MS detector and for replacing failed PCBs and assemblies.

Chapter 9: LCQ Advantage MAX Replaceable Parts lists the replaceable parts for the LCQ Advantage MAX MS detector and data system.

Chapter 10: LCQ Deca XP MAX Replaceable Parts lists the replaceable parts for the LCQ Deca XP MAX MS detector and data system.

Changes to the Manual and Online Help

To suggest changes to this manual or the online Help, please send your comments to:

Editor, Technical Publications
Thermo Electron San Jose
355 River Oaks Parkway
San Jose, CA 95134-1991
U.S.A.

You are encouraged to report errors or omissions in the text or index. Thank you.

Abbreviations

The following abbreviations are used in this and other manuals and in the online Help.

A	ampere
ac	alternating current
ADC	analog-to-digital converter
AP	acquisition processor
APCI	atmospheric pressure chemical ionization
API	atmospheric pressure ionization
ASCII	American Standard Code for Information Interchange
b	bit
B	byte (8 b)
baud rate	data transmission speed in events per second
°C	degrees Celsius
CD	compact disc
CD-ROM	compact disc read-only memory
cfm	cubic feet per minute
CI	chemical ionization
CIP	carriage and insurance paid to
cm	centimeter
cm^3	cubic centimeter
CPU	central processing unit (of a computer)
CRC	cyclic redundancy check
CRM	consecutive reaction monitoring
<Ctrl>	control key on the terminal keyboard
d	depth
Da	dalton
DAC	digital-to-analog converter
dc	direct current
DDS	direct digital synthesizer
DEP™	direct exposure probe
DS	data system
DSP	digital signal processor

EI	electron ionization
EMBL	European Molecular Biology Laboratory
<Enter>	enter key on the terminal keyboard
ESD	electrostatic discharge
ESI	electrospray ionization
eV	electron volt
f	femto (10^{-15})
°F	degrees Fahrenheit
.fasta file	extension of a SEQUEST search database file
FOB	free on board
ft	foot
FTP	file transfer protocol
g	gram
G	giga (10^9)
GC	gas chromatograph; gas chromatography
GC/MS	gas chromatograph / mass spectrometer
GND	electrical ground
GPIB	general-purpose interface bus
GUI	graphical user interface
h	hour
h	height
HPLC	high-performance liquid chromatograph
HV	high voltage
Hz	hertz (cycles per second)
ICIS™	Interactive Chemical Information System
ICL™	Instrument Control Language™
ID	inside diameter
IEC	International Electrotechnical Commission
IEEE	Institute of Electrical and Electronics Engineers
in.	inch
I/O	input/output
k	kilo (10^3, 1000)
K	kilo (2^{10}, 1024)
KEGG	Kyoto Encyclopedia of Genes and Genomes
kg	kilogram

l	length
L	liter
LAN	local area network
lb	pound
LC	liquid chromatograph; liquid chromatography
LC/MS	liquid chromatograph / mass spectrometer
LED	light-emitting diode
µ	micro (10^{-6})
m	meter
m	milli (10^{-3})
M	mega (10^{6})
M+	molecular ion
MB	Megabyte (1048576 bytes)
MH+	protonated molecular ion
min	minute
mL	milliliter
mm	millimeter
MS	mass spectrometer; mass spectrometry
MS	MS^n power: where n = 1
MS/MS	MS^n power: where n = 2
MS^n	MS^n power: where n = 1 through 10
m/z	mass-to-charge ratio
n	nano (10^{-9})
NCBI	National Center for Biotechnology Information (USA)
NIST	National Institute of Standards and Technology (USA)
OD	outside diameter
Ω	ohm
p	pico (10^{-12})
Pa	pascal
PCB	printed circuit board
PID	proportional / integral / differential
P/N	part number
P/P	peak-to-peak voltage

ppm	parts per million
psig	pounds per square inch, gauge
RAM	random access memory
RF	radio frequency
RMS	root mean square
ROM	read-only memory
RS-232	industry standard for serial communications
s	second
SIM	selected ion monitoring
solids probe	direct insertion probe
SRM	selected reaction monitoring
SSQ®	single stage quadrupole
TCP/IP	transmission control protocol / Internet protocol
TIC	total ion current
Torr	torr
TSQ®	triple stage quadrupole
u	atomic mass unit
URL	uniform resource locator
V	volt
V ac	volts alternating current
V dc	volts direct current
vol	volume
w	width
W	watt
WWW	World Wide Web

Note. Exponents are written as superscripts. In the corresponding online Help, exponents are sometimes written with a caret (^) or with *e* notation because of design constraints in the online Help. For example:

MS^n (in this manual)	MS^n (in the online Help)
10^5 (in this manual)	10^5 (in the online Help)

Typographical Conventions

Typographical conventions have been established for Thermo Electron San Jose manuals for the following:

- Data input
- Boxed information
- Topic headings

Data Input

Throughout this manual, the following conventions indicate data input and output via the computer:

- Messages displayed on the screen are represented by capitalizing the initial letter of each word and by italicizing each word.
- Input that you enter by keyboard is represented in **bold face letters**. (Titles of topics, chapters, and manuals also appear in bold face letters.)
- For brevity, expressions such as “choose **File > Directories**” are used rather than “pull down the File menu and choose Directories.”
- Any command enclosed in angle brackets < > represents a single keystroke. For example, “press <F1>” means press the key labeled *F1*.
- Any command that requires pressing two or more keys simultaneously is shown with a plus sign connecting the keys. For example, “press **<Shift> + <F1>**” means press and hold the <Shift> key and then press the <F1> key.
- Any button that you click on the screen is represented in bold face letters and a different font. For example, “click on **Close**”.

Boxed Information

Information that is important, but not part of the main flow of text, is displayed in a box such as the one below.

> **Note**. Boxes such as this are used to display information.

Boxed information can be of the following types:

- **Note** – information that can affect the quality of your data. In addition, notes often contain information that you might need if you are having trouble.
- **Tip** – helpful information that can make a task easier.
- **Important** – critical information that can affect the quality of your data.
- **Caution** – information necessary to protect your instrument from damage.
- **CAUTION** – hazards to human beings. Each CAUTION is accompanied by a CAUTION symbol. Each hardware manual has a blue CAUTION sheet that lists the CAUTION symbols and their meanings.
- **DANGER** – laser-related hazards to human beings. It includes information specific to the class of laser involved. Each DANGER is accompanied by the international laser radiation symbol.

Topic Headings

The following headings are used to show the organization of topics within a chapter:

Chapter 1
Chapter Name

1.2 Second Level Topics

Third Level Topics

Fourth Level Topics

Fifth Level Topics

Safety Precautions

Observe the following safety precautions when you operate or perform service on the MS detector.

Do Not Perform Any Servicing Other Than That Contained in the Finnigan LCQ Series Hardware Manual.

To avoid personal injury or damage to the instrument, do not perform any servicing other than that contained in the **Finnigan LCQ Series Hardware Manual** or related manuals unless you are qualified to do so.

Shut Down the MS Detector and Disconnect It From Line Power Before You Service It.

High voltages capable of causing personal injury are used in the instrument. Some maintenance procedures require that the MS detector be shut down and disconnected from line power before service is performed. Do not operate the MS detector with the top or side covers off. Do not remove protective covers from PCBs.

Respect Heated Zones.

Treat heated zones with respect. The ion transfer capillary and the APCI vaporizer might be very hot and might cause severe burns if they are touched. Allow heated components to cool before you service them.

Place the MS Detector in Standby (or Off) Before You Open the Atmospheric Pressure Ionization (API) Source.

The presence of atmospheric oxygen in the API source when the MS detector is On could be unsafe. (the LCQ Series MS detector automatically turns the MS detector Off when you open the API source; however, it is best to take this added precaution.)

Make Sure You Have Sufficient Nitrogen For Your API Source.

Before you begin normal operation each day, make sure that you have sufficient nitrogen for your API source. The presence of atmospheric oxygen in the API source when the MS detector is On could be unsafe. (the LCQ Series MS detector automatically turns the MS detector Off when you run out of nitrogen, however, it is best to take this added precaution.)

Provide an Adequate Fume Exhaust System and Contain Waste Streams.

It is your responsibility to provide an adequate fume exhaust system. Samples and solvents that are introduced into the LCQ Series MS detector will eventually be exhausted from the forepump. Therefore, the forepump should be connected to a fume exhaust system. Consult local regulations for the proper method of exhausting the fumes from your system.

The API source can accommodate high flow rates. Therefore, provisions must be made to collect the waste solvent. The API source is fitted with a 6 mm (0.25 in.) ID connector for solvent drainage. A 6 mm (0.25 in.) PVC drain tube, which is provided with the system, should be connected between the API source and an appropriate collection container. (The waste container can be something as simple as an old solvent bottle with a modified cap.)

Do **not** vent the PVC drain tube (or any vent tubing connected to the waste container) to the same fume exhaust system to which you have connected the forepump. The analyzer optics can become contaminated if the API source drain tube and the (blue) forepump exhaust tubing are connected to the same fume exhaust system.

Your laboratory must be equipped with at least two fume exhaust systems. Route the (blue) forepump exhaust tubing to a dedicated fume exhaust system. Route the PVC drain tube from the API source to the waste container. Vent the waste container to a dedicated fume exhaust system.

Use Care When Changing Vacuum Pump Oil.

Treat drained vacuum pump oil and pump oil reservoirs with care. Hazardous compounds introduced into the system might have become dissolved in the pump oil. Always use approved containers and procedures for disposing of waste oil. Whenever a pump that has been operating on a system used for the analysis of toxic, carcinogenic, mutagenic, or corrosive/irritant chemicals, the pump must be decontaminated by the user and certified to be free of contamination before repairs or adjustments are made by a Thermo Electron San Jose Customer Support Engineer or before it is sent back to the factory for service.

Solvent and Gas Purity Requirements

Use the highest purity solvents available. The LCQ Series MS detector is extremely sensitive to solvent impurities. Some solvent impurities are transparent to UV/Visible detectors, but are easily detected by the LCQ Series MS detector. Liquid chromatography grade is the minimum acceptable purity. Higher grade solvents are preferred. Distilled water is recommended. Deionized water contains chemicals and is not recommended.

The following is a list of international sources that can supply high quality solvents:

Solvent Source	Telephone Number
Mallinckrodt/Baker, Inc.	Tel: (800) 582-2537 Fax: (908) 859-6905
Burdick & Jackson, Inc.	Tel: (800) 368-0050 Fax: (231) 725-6216
EMD Chemicals, Inc.	Tel: (800) 222-0342 Fax: (856) 423-4389

The LCQ Series MS detector uses argon as a collision gas. The argon should be high purity (99.995%). The required gas pressure is 135 ± 70 kPa (20 ± 10 psig). Thermo Electron has found that particulate filters are often contaminated and are therefore not recommended.

The LCQ Series MS detector uses nitrogen as a sheath gas and auxiliary gas. The nitrogen should be high purity (99%). The required gas pressure is 690 ± 140 kPa (100 ± 20 PSI).

Service Philosophy

Servicing the LCQ Series system consists of performing procedures required to maintain system performance standards, to prevent system failure, and/or to restore the system to an operating condition. Routine and preventive maintenance procedures are documented in this manual.

Routine and preventive maintenance are the responsibility of the user during and after the warranty period. Regular maintenance will increase the life of the system, maximize the up-time of your system, and allow you to achieve optimum system performance.

Service not described in this manual should be performed only by a Thermo Electron Customer Support Engineer or similarly trained and qualified technical personnel.

Level of Repair

Thermo Electron's service philosophy for LCQ Series systems calls for troubleshooting to the lowest part, assembly, PCB, or module listed in the **Replaceable Parts** chapter of this manual.

For mechanical failures: A mechanical assembly typically is to be repaired to the level of the smallest item listed in the **Replaceable Parts** chapter of this manual.

For electronic failures: PCBs are not repaired to the component level except in certain cases of fuses, relays, etc. When these exceptions occur, the components can be found in the **Replaceable Parts** chapter.

Reply Cards

Thermo Electron San Jose manuals contain one or two reply cards. All manuals contain a Customer Registration / Reader Survey card and some contain a Change of Location card. These cards are located at the front of each manual.

The Customer Registration / Reader Survey card has two functions. First, when you return the card, you are placed on the Thermo Electron San Jose mailing list. As a member of this list, you receive application reports and technical reports in your area of interest, and you are notified of events of interest, such as user meetings. Second, it allows you to tell us what you like and do not like about the manual.

The Change of Location card allows us to track the whereabouts of the instrument. Fill out and return the card if you move the instrument to another site within your company or if you sell the instrument. Occasionally, we need to notify owners of our products about safety or other issues.

Chapter 1
Introduction

The LCQ Advantage MAX and LCQ Deca XP MAX instruments are members of the LCQ™ family of Finnigan™ MS detectors. The Finnigan LCQ Series MS detector is an analytical instrument that includes a mass spectrometer, a syringe pump, and a data system. See Figure 1-1. In a typical LC/MS analysis, a sample is introduced into a high performance liquid chromatograph (HPLC) either manually or by an autosampler. The sample is carried onto the LC column and separates into its chemical components as it moves through the column. The separated chemical components pass through a transfer line and then enter the LCQ Series MS detector to be analyzed. You can also introduce a sample directly into the MS detector with the syringe pump or through the divert/inject valve.

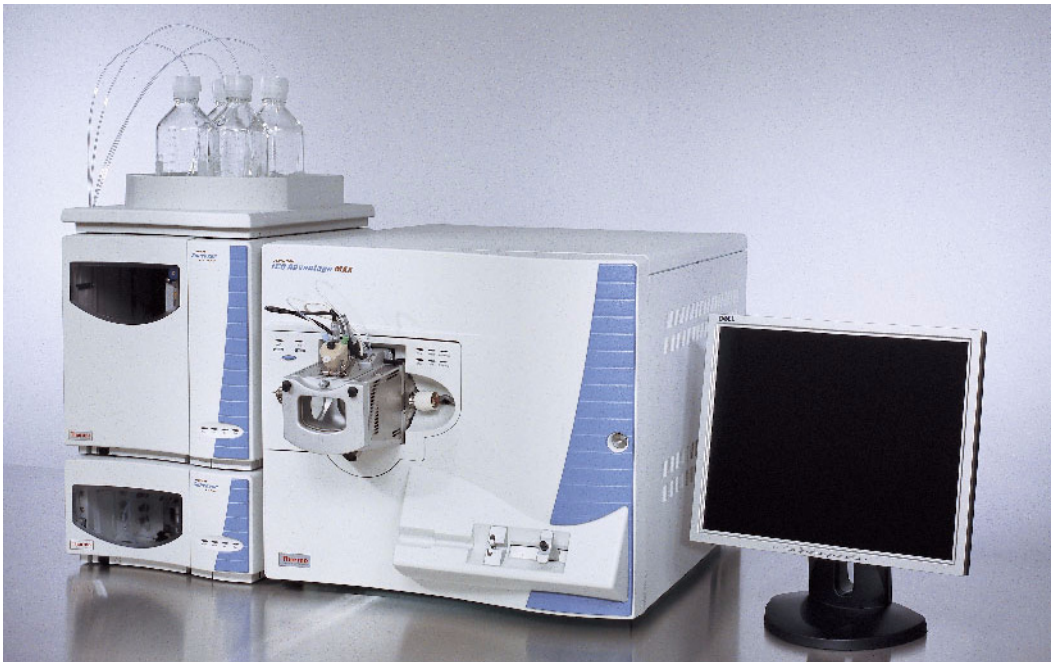

Figure 1-1. LCQ Advantage MAX system

The LCQ Series MS detector consists of an atmospheric pressure ionization (API) source, ion optics, mass analyzer, and ion detection system. The ion optics, mass analyzer, ion detection system, and part of the API source are enclosed in a vacuum manifold. Ionization of the sample takes place in the API source. The specific method used to ionize the sample is referred to as the ***ionization technique.*** The ions produced in the API source are transmitted by

the ion optics into the mass analyzer, where they are trapped in stable orbits by a time-varying electric field. The polarity of the potentials applied to the API source and ion optics determines whether positively charged ions or negatively charged ions are transmitted to the mass analyzer. You can configure the LCQ Series MS detector to analyze positively or negatively charged ions (called the ***ion polarity mode***).

The lenses in the API source and ion optics act as a gate to start and stop the transmission of ions from the API source to the mass analyzer. The function of these lenses is controlled by an automatic gain control (AGC) that sets them to transmit the optimum number of ions to the mass analyzer.

The mass-to-charge ratios of the ions produced in the API source are measured by the mass analyzer. Selected ions are ejected from the mass analyzer and reach the ion detection system where they produce a signal. The signal produced is then amplified by the detection system electronics.

The ion detection system signal is analyzed by the LCQ Series data system. The data system serves as the user interface to the MS detector, autosampler, LC, and syringe pump. Refer to the online Help for more information on the LCQ Series data processing and instrument control software.

Each sequence of loading the mass analyzer with ions followed by mass analysis of the ions is called a ***scan***. The LCQ Series MS detector uses several different *scan modes* and different *scan types* to load, fragment, and eject ions from the mass analyzer. The ability to vary the scan mode and scan type, as well as the ionization and ion polarity modes, affords the user great flexibility for solving complex analytical problems.

This chapter provides an overview of the LCQ Series MS detector. Specific topics covered are as follows:

- Ion polarity modes
- Ionization techniques
- Scan modes
- Scan types
- Data types

1.1 Ion Polarity Modes

You can operate the LCQ Series MS detector in either of two ***ion polarity modes***: positive or negative. The MS detector can control whether positive ions or negative ions are transmitted to the mass analyzer for mass analysis by changing the polarity of the potentials applied to the API source and ion optics. The ion optics are located between the API source and the mass analyzer.

The information obtained from a positive-ion mass spectrum is different from and complementary to that obtained from a negative-ion spectrum. Thus, the ability to obtain both positive-ion and negative-ion mass spectra aids you in the qualitative analysis of your sample. You can choose the ion polarity mode and ionization technique to obtain maximum sensitivity for the particular analyte of interest.

1.2 Ionization Techniques

You can operate the LCQ Series MS detector using any of three ionization techniques, as follows:

- Electrospray ionization (ESI)
- Atmospheric pressure chemical ionization (APCI)
- Nanospray ionization (NSI)

For information about the theory and implementation of ESI and APCI, refer to the **Finnigan Ion Max API Source Hardware Manual**. For more information on NSI, refer to the **LCQ Series Nanospray Ion Source Operator's Manual.**

1.3 Scan Power and Scan Modes

Ions that are produced in the ion source are often referred to as ***parent ions***. These parent ions can be mass analyzed to produce a mass spectrum. Alternatively, by varying the RF voltages of the mass analyzer, the LCQ Series MS detector can first eject all ions except for several selected parent ions, and then collide these ions with helium that is present in the mass analyzer. This helium is known as buffer gas. The collisions of the selected precursor ions with the helium can cause them to fragment into ***product ions***. The product ions can be mass analyzed.

The number of stages of mass analysis is represented as MS^n where *n* is the ***scan power***. (Each stage of mass analysis includes an ion selection step.) The higher the scan power, the more structural information is obtained about the analyte.

The two scan powers supported by LCQ Advantage MAX in its standard configuration are as follows:

- MS scan mode ($n = 1$)
- MS/MS scan mode ($n = 2$)

LCQ Deca XP MAX, and LCQ Advantage MAX with special configurations support *n* values of up to 10.

MS Scan Mode

The MS or mass spectrometry scan mode corresponds to a single stage of mass analysis (that is, a scan power of n = 1). The MS scan mode involves only parent ions, and no fragmentation of the parent ions takes place. The MS scan mode can be a full scan experiment or a selected ion monitoring (SIM) experiment (see below).

MS^n and MS/MS Scan Modes

The ***MS^n scan*** corresponds to two or more stages of mass analysis. The ***MS^n scan*** is a special case ($n = 2$ scan power). The LCQ Advantage MAX MS detector can give only MS/MS scans, while the LCQ Deca XP MAX MS detector can give scan powers up to n = 10. In an MS^n scan, parent ions are fragmented into product ions in one or more stages. An MS/MS scan can be a full scan experiment or a selected reaction monitoring (SRM) experiment. Higher scan powers can be used for full scan experiments, SRM, or data-dependent neutral loss experiments (see below).

1.4 Scan Types

You can operate the LCQ Series MS detector in the following scan types:

- Full scan
- Selected ion monitoring (SIM)
- Selected reaction monitoring (SRM)
- ZoomScan™

Full Scan

The ***full scan*** scan type provides a full mass spectrum of each analyte or parent ion. With full scan, in the last step of mass analysis (the ion scan-out step) the mass analyzer is scanned from the first mass to the last mass without interruption.

Full scan scan type provides more information about an analyte than does selected ion monitoring (SIM) or selected reaction monitoring (SRM), but full scan does not provide the sensitivity that can be achieved by the other scan types.

The full scan scan type includes the following:

- Single-stage full scan
- Two-stage full scan

Single-Stage Full Scan

The single-stage full scan type has one stage of mass analysis (n = 1 scan power). With single-stage full scan type, the ions formed in the ion source are stored in the mass analyzer. Then, these ions are sequentially scanned out of the mass analyzer to produce a full mass spectrum.

Single-stage full scan experiments can be used to determine the molecular weight of unknown compounds or the molecular weight of each component in a mixture of unknown compounds. For example, you need a full scan to determine the molecular weight of each component of a mixture of unknown compounds, because you do not know what masses to expect from the mixture.

To use the SIM or SRM scan type, you need to know what ions you are looking for before you can perform an experiment. Thus, for SIM or SRM you can use a full scan to determine the identity of an analyte and obtain its mass spectrum. Then, you might use SIM or SRM to do routine quantitative analysis of the compound.

Two-Stage Full Scan

The two-stage full scan type has two stages of mass analysis (n = 2 scan power). In the first stage of mass analysis, the ions formed in the ion source are stored in the mass analyzer. Then, ions of one mass-to-charge ratio (the parent ions) are selected and all other ions are ejected from the mass analyzer. The parent ions are excited so that they collide with background gas that is present in the mass analyzer. The collisions of the parent ions cause them to fragment to produce one or more product ions.

In the second stage of mass analysis, the product ions are stored in the mass analyzer. Then, they are sequentially scanned out of the mass analyzer to produce a full product ion mass spectrum.

The two-stage full scan type gives you more information about a sample than does SRM, but two-stage full scan type does not yield the speed that can be achieved by SRM. With two-stage full scan, you spend more time monitoring the product ions than you do in SRM. Thus, two-stage full scan provides greater information, but lower speed than SRM does.

To use the SRM scan type, you need to know what parent / product reaction you are looking for before you can perform an experiment. Thus, for SRM you might use one-stage full scan type to determine the parent mass spectrum and two-stage full scan type to determine the product mass spectra for parent ions of interest. Then, you might use SRM to do routine quantitative analysis of the compound.

Selected Ion Monitoring

Selected ion monitoring (SIM) is a single-stage (n = 1 scan power) technique in which a particular ion or set of ions is monitored. In the SIM scan type, the ions formed in the ion source are stored in the mass analyzer. Ions of one or more mass-to-charge ratios are selected and all other ions are ejected from the mass analyzer. Then, the selected ions are sequentially scanned out of the mass analyzer to produce a SIM mass spectrum.

SIM experiments are useful in detecting small quantities of a target compound in a complex mixture when the mass spectrum of the target compound is known. Thus, SIM is useful in trace analysis and in the rapid screening of a large number of samples for a target compound.

Because only a few ions are monitored, SIM can provide lower detection limits and greater speed than a single-stage full scan analysis can provide. SIM achieves lower detection limits because more time is spent monitoring significant ions that are known to occur in the mass spectrum of the target sample. SIM achieves greater speed because only a few ions of interest are monitored; regions of the spectrum that are empty or have no ions of interest are not monitored.

SIM can improve the detection limit and decrease analysis time, but it can also reduce specificity. In SIM, only specific ions are monitored. Therefore, any compound that produces those ions appears to be the target compound. Thus, a false positive result can be obtained.

Selected Reaction Monitoring

Selected reaction monitoring (SRM) is a two-stage (n = 2 scan power) technique in which parent ion and product ion *pairs* are monitored.

In the first stage of mass analysis, the ions formed in the ion source are stored in the mass analyzer. Ions of one mass-to-charge ratio (the parent ions) are selected and all other ions are ejected from the mass analyzer. Then, the parent ions are excited so that they collide with background gas that is present in the mass analyzer. The collisions of the parent ions cause them to fragment to produce one or more product ions.

In the second stage of mass analysis, the product ions are stored in the mass analyzer. Ions of one or more mass-to-charge ratios are selected and all other ions are ejected from the mass analyzer. Then, the selected ions are sequentially scanned out of the mass analyzer to produce an SRM product ion mass spectrum.

Like SIM, SRM allows for the very rapid analysis of trace components in complex mixtures. However, because you are monitoring pairs of ions (one product ion for each parent ion), the specificity obtained in SRM can be much greater than that obtained in SIM. Thus, you are very unlikely to get a false positive result with SRM. To get a false positive result, the interfering compound must do the following: First, it must form a parent ion of the same mass-to-charge ratio as the selected parent ion from the target compound. Second, it must also fragment to form a product ion of the same mass-to-charge ratio as the selected product ion from the target compound.

Data-Dependent Neutral Loss MS^n

Data-Dependent Neutral Loss MS^n experiments are another type of Data-Dependent experiment. These experiments allow you to select and fragment only those ions that exhibit a neutral loss that you specify. They are similar to SRM experiments in that you are monitoring an ion reaction, but they differ in that no single parent ion or product ion is selected for analysis. Instead you specify how many ions to monitor (for example, the 10 most intense parent ions), the MS detector identifies those ions in the n-1 scan order, then scans the nth fragmentation products for ions which represent a specified neutral loss from the selected parents.

For example, an experiment of this type could be used to identify which amino acid residues on a polypeptide have been phosphorylated. In the first stage of mass analysis the peptide ion is identified and all other ions are selectively ejected from the mass analyzer. In the second stage of mass

analysis the peptide ions are subjected to a low-energy fragmentation to remove phosphate groups, and the MS detector identifies product ions that show a mass loss equivalent to one or more phosphate groups, then selectively ejects all other ions from the mass analyzer. Finally, in the third stage of mass analysis, those product ions are fragmented to provide amino acid residues, and a full scan analysis provides the mass to charge ratios that allow you to identify the dephosphorylated amino acids.

Data-Dependent Neutral Loss experiments provide extremely selective tools for isolating and identifying specific components of a complex mixture.

ZoomScan

The determination of the mass of an ion from its mass-to-charge ratio may be complicated by the fact that the charge state of the ion may be unknown. ***ZoomScan*** is a high resolution MS scan type in which the LCQ Series MS detector performs a high resolution scan that allows you to determine the charge state and molecular weight of an ion. The MS detector conducts a high resolution scan of 10 u width and evaluates the ^{12}C /^{13}C isotopic separation of a specified ion or ions. If the isotopic peaks are 1 u apart, the ion has a charge state of ±1. If the isotopic peaks are 0.5 u apart, the ion has a charge state of ±2. If the isotopic peaks are 0.33 u apart, the ion has a charge state of ±3, and so on. You can then determine the molecular weight of the ion from a knowledge of the charge state and mass-to-charge ratio of the ion. You can conduct a ZoomScan analysis of up to ten ions by specifying the mass-to-charge ratios of the ions.

1.5 Data Types

You can acquire and display mass spectral data (intensity versus mass-to-charge ratio) with the LCQ Series MS detector in one of two data types:

- Profile data type
- Centroid data type

Profile Data Type

In the ***profile data type***, you can see the shape of the peaks in the mass spectrum. Each atomic mass unit is divided into approximately 15 sampling intervals. The intensity of the ion current is determined at each of the sampling intervals. The intensity at each sampling interval is displayed with the intensities connected by a continuous line. In general, the profile scan data type is used when you tune and calibrate the MS detector so that you can easily see and measure mass resolution.

Centroid Data Type

In the ***centroid data type***, the mass spectrum is displayed as a bar graph. In this scan data type, the intensities of each set of 15 sampling intervals are summed. This sum is displayed versus the integral center of mass of the 15 sampling intervals. In general, the centroid scan data type is used for data acquisition because the scan speed is faster (but the resolution is lower) and the disk space requirements are smaller. Data processing is also much faster for centroid data.

Chapter 2
Functional Description

This chapter describes the principal components of the LCQ Series MS detector system and their respective functions. The principal components of the system are as follows:

- Autosampler (optional)
- Liquid chromatograph (optional)
- Syringe pump
- Divert/inject valve (optional)
- MS detector
- Data system

A functional block diagram of the LCQ Series MS detector system is shown in Figure 2-1. A sample transfer line connects the LC to the MS detector. The autosampler and LC are usually installed on the left of the MS detector. The syringe pump and divert/inject valve are integrated into the MS detector cabinet.

Samples are injected (either manually or by an autosampler) into the LC inlet. The LC then separates the sample molecules by liquid chromatography. The separated constituents from the LC flow through the transfer line and are introduced into the atmospheric pressure ionization (API) source. You can also inject (infuse) samples into the API source with the syringe pump or the divert/inject valve.

Upon entering the API source, sample molecules are ionized by electrospray ionization (ESI) or atmospheric pressure chemical ionization (APCI). The ion optics focus and accelerate the resulting sample ions into the mass analyzer, where they are analyzed according to their mass-to-charge ratios. The sample ions are then detected by an ion detection system that produces a signal proportional to the number of ions detected. The ion current signal from the ion detection system is received and amplified by the system electronics and is then passed on to the data system for further processing, storage, and display. The data system provides the primary LCQ Series MS detector user interface.

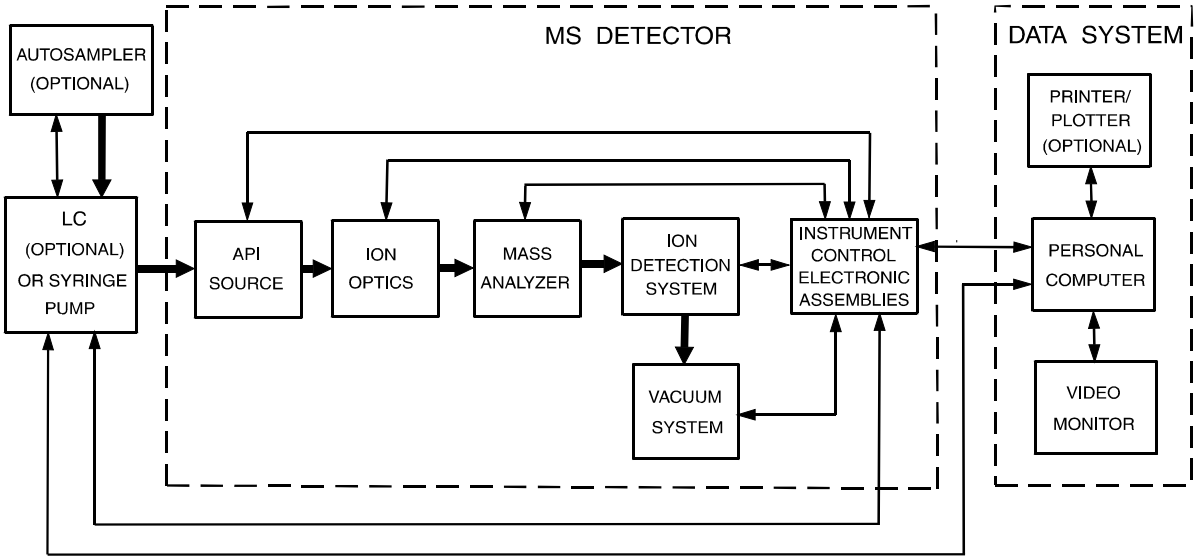

Figure 2-1. Functional block diagram of the LCQ Series MS detector system. The broad, single-headed arrows represent the flow of sample molecules through the instrument. The narrow, double-headed arrows represent electrical connections.

2.1 Autosampler

The ***autosampler*** is used to inject samples automatically into the LC inlet. Thermo Electron Finnigan[1] (Surveyor, AS3000, and AS3500), Waters (Alliance 2690), and Agilent[2] (1050, 1090, and 1100) autosamplers can be controlled directly from the LCQ Series data system computer. With an autosampler, you can automate your LC/MS analyses.

> **Note.** For other autosamplers, the LCQ Series MS detector provides contact closure Start/Stop signals. Refer to **LCQ Series Getting Connected** for information on connecting an autosampler to the LCQ Series MS detector by contact closure Start/Stop signals.

You can configure the Xcalibur® data system for your autosampler from the data system computer. You specify the model name and model number by selecting the appropriate instrument button in the Instrument Configuration window, which is available by choosing **Start > Programs > Xcalibur > Instrument Configuration**. Refer to the Xcalibur online Help for a description of Instrument Configuration.

You can also set up, monitor, and control the autosampler from the data system computer from the Instrument Setup window, which is available by choosing **Start > Programs > Xcalibur > Xcalibur** and then clicking on the Instrument Setup button. Refer to the Xcalibur online Help for a description of Instrument Setup.

Front-panel (keypad) operation of the autosampler and maintenance procedures for the autosampler are described in the documentation provided with the autosampler.

[1] Formerly Thermo Separation Products (TSP)

[2] Formerly Hewlett-Packard (HP)

2.2 Liquid Chromatograph

The high performance ***liquid chromatograph*** (LC) separates a sample mixture into its chemical components by liquid chromatography. In liquid chromatography, the sample mixture partitions between a solid stationary phase of large surface area and a liquid mobile phase that percolates over the stationary phase. The molecular structure of each component of the mixture determines when each component elutes from the LC and enters the MS detector.

Thermo Electron Finnigan (Surveyor, P2000, and P4000), Waters (Alliance 2690), and Agilent (1050, 1090, and 1100) LCs (and the corresponding UV detectors) can be controlled directly from the LCQ Series data system computer. Refer to **LCQ Series Getting Connected** for information on connecting an LC to the LCQ Series MS detector.

You can configure the Xcalibur data system for your LC and UV detector from the data system computer. You specify the model name and model number by selecting the appropriate instrument button in the Instrument Configuration window. Refer to the Xcalibur online Help for a description of Instrument Configuration.

You can also set up, monitor, and control the LC and UV detector from the data system computer from the Instrument Setup window. Refer to the Xcalibur online Help for a description of Instrument Setup.

Front-panel (keypad) operation of the LC and maintenance procedures for the LC are described in the documentation provided with the LC.

2.3 Syringe Pump

The LCQ Series MS detector includes an electronically-controlled, integrated ***syringe pump***. The syringe pump delivers sample solution from the syringe into the API source. See Figure 2-2. When the syringe pump is operating, a motor drives a ***pusher block*** that depresses the plunger of the syringe at a rate of 1% of the syringe volume per minute. Liquid flows out of the syringe needle and into the sample transfer line as the plunger is depressed. The syringe is held in place by a ***syringe holder***. Refer to **LCQ Series Getting Started** for instructions on setting up the syringe pump.

You can start and stop the syringe pump from the Syringe Pump dialog box, which can be reached from the Tune Plus window (which is available by choosing **Start > Programs > Xcalibur > LCQ Tune**). You can also specify the Purge mode, in which the flow rate is 5% of the syringe volume per minute. Refer to the Xcalibur online Help for instructions on operating the syringe pump from the data system.

The ***syringe pump LED*** (see Figure 2-4) is illuminated green whenever the syringe pump is pumping. The LED is illuminated yellow if the syringe pump is at the end of its travel.

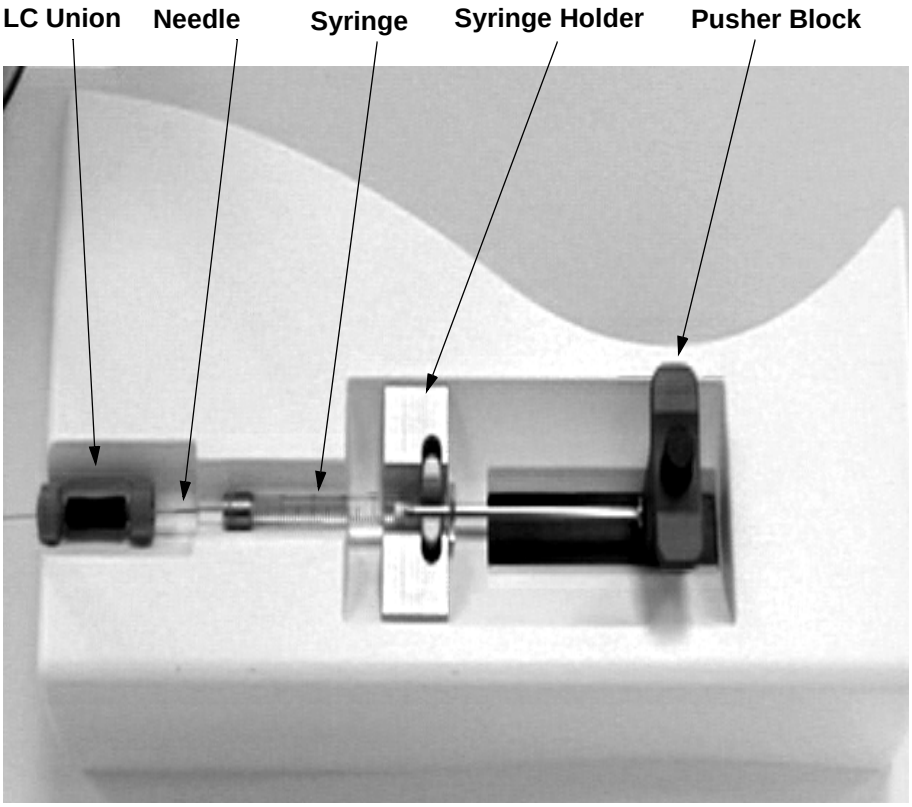

Figure 2-2. Syringe pump

2.4 Divert/Inject Valve

The divert/inject valve is located on the front of the LCQ Series MS detector to the left of the API source. See Figure 2-3. You can configure (plumb) the divert/inject valve as a loop injector (for flow injection analysis) or as a divert valve. Procedures for plumbing the valve in the loop injector or divert valve configuration are given in **LCQ Series Getting Connected.**

You can control the divert/inject valve from the data system. You specify the parameters of the divert/inject valve in the Divert/Inject Valve dialog box, which can be reached from the Tune Plus window, or the Divert Valve page, which can be reached from the Instrument Setup window. Refer to the online Help for instructions on operating the divert/inject valve from the data system.

You can also use the divert/inject valve button to divert the LC flow between the MS detector and waste when the valve is in the divert valve configuration, or switch between load and inject modes when the valve is in the loop injector configuration.

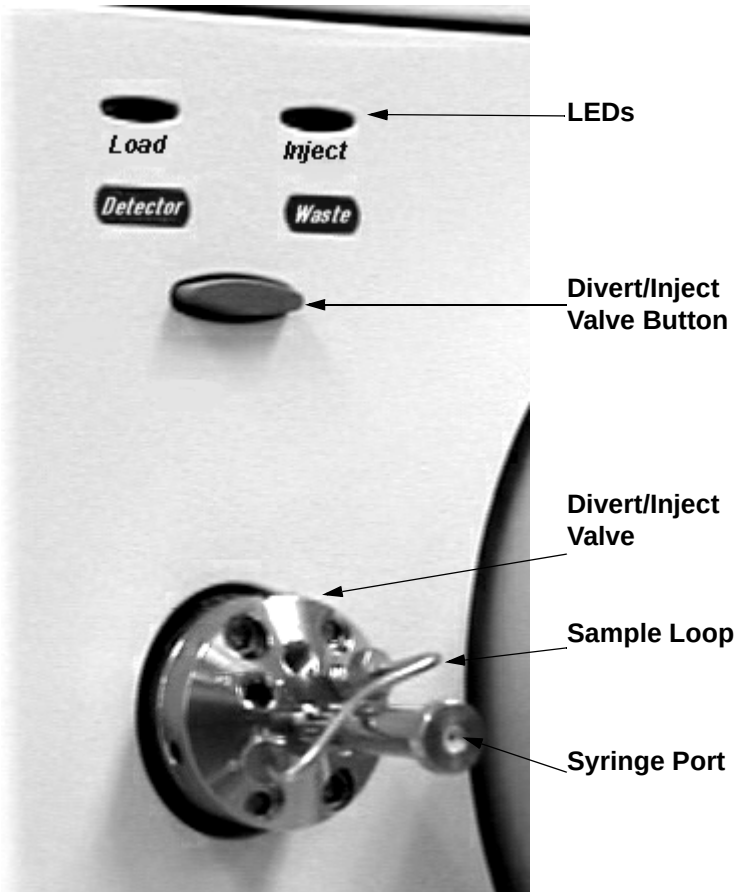

Figure 2-3. Divert/inject valve

2.5 MS Detector

The ***MS detector*** provides sample ionization and mass analysis of injected samples or samples eluted from a liquid chromatograph. The LCQ Series MS detector uses a quadrupole ion trap mass analyzer with an ion source external to the mass analyzer. Several important features of the LCQ Series MS detector are as follows:

- Universal, selective, and specific detector
- High sensitivity
- *m/z* 50 to 2000 mass range
- ESI, APCI, and NSI ionization techniques
- Positive and negative ion polarity modes
- MS and MS/MS scan modes
- Full scan, SIM, SRM, and ZoomScan scan types

The MS detector includes the following components:

- Controls and indicators
- API source
- Ion optics
- Mass analyzer
- Ion detection system
- Vacuum system and inlet gasses hardware
- Cooling fans
- Electronic assemblies

Controls and Indicators

Six light-emitting diodes (LEDs) are located at the upper right side of the front panel of the MS detector. See Figure 2-4.

The LED labeled *Power* is illuminated whenever power is supplied to the vacuum system and electronic assemblies of the MS detector. The color of the LED depends on whether the MS detector is in the Normal, Warning, or Failure condition, as follows:

- In the Normal condition, the temperature in the embedded computer is less than 37 °C and its +5 V dc supply level is between +4.98 and +5.25 V dc. The Power LED is illuminated solid green.

- In the Warning condition, the temperature in the embedded computer is marginal, or its +5 V dc is marginal. Marginal temperature is between 37 and 45 °C. Marginal +5 V dc supply level is between +4.75 and 4.97 V dc. The Power LED flashes yellow.
- In the Failure condition, the temperature in the embedded computer is greater than 45 °C or its +5 V dc supply level is less than +4.75 V dc. The Power LED is illuminated solid yellow and the MS detector is held in Reset mode until the failure condition is cleared.

The LED labeled *Vacuum* is illuminated green whenever the vacuum protection circuitry indicates that the vacuum is OK and the safety-interlock switch on the API source is depressed (that is, the API flange is secured to the spray shield). If the LED labeled Vacuum is not illuminated, high voltage is not applied to LCQ Series MS detector components.

The LED labeled *Communication* is illuminated yellow when the MS detector and the data system are trying to establish a communication link. The Communication LED is illuminated green when the communication link between the MS detector and the data system has been made.

The LED labeled *System* is illuminated yellow whenever the MS detector is in Standby (that is, high voltage is not supplied to the API source, mass analyzer, and ion detection system, but the MS detector power is on). The System LED is illuminated green whenever the MS detector is On (that is, high voltage is supplied to the API source, mass analyzer, and ion detection system).

The LED labeled *Scan* flashes blue whenever the MS detector is On and scanning ions.

The LED labeled *Syringe Pump* is illuminated green whenever the syringe pump is pumping. The Syringe Pump LED is illuminated yellow when the pump reaches its end of its travel. The LED is extinguished when the syringe pump is not on and not at the end of its travel.

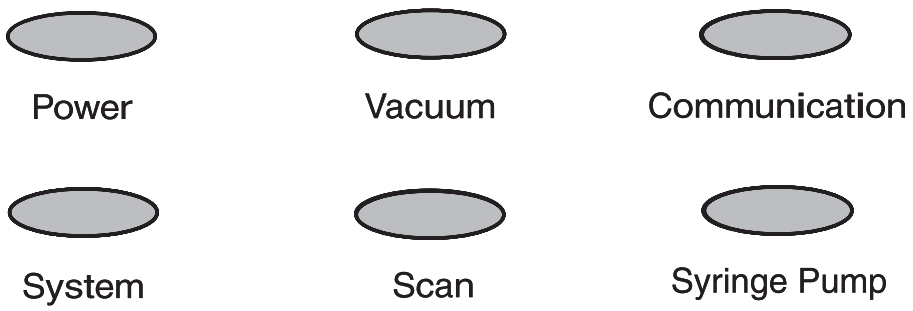

Figure 2-4. Front panel LEDs of the MS detector

Two additional LEDs and a push-button switch are located on the front panel above the divert/inject valve. See Figure 2-5. When the divert/inject valve is set up for loop injections, the divert/inject valve button toggles the valve between load and inject modes and the labels *Load* and *Inject* apply. When the

divert/inject valve is set up for divert valve operation, the divert/inject valve button toggles the LC flow between the MS detector and the waste container and the labels *Detector* and *Waste* apply.

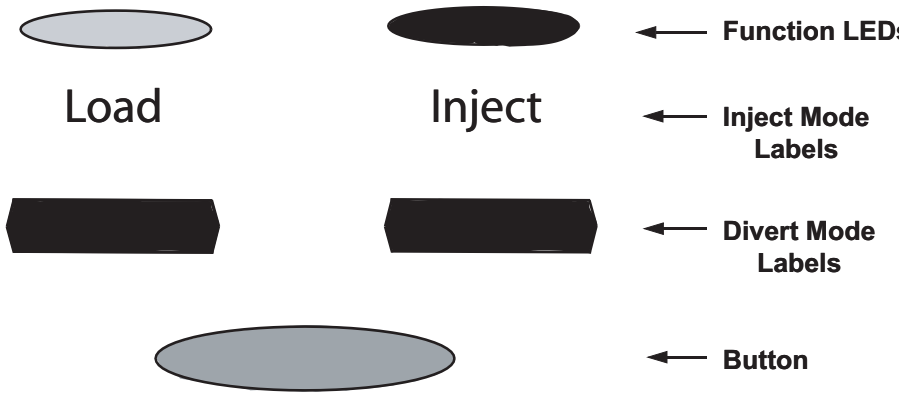

Figure 2-5. Divert/inject valve button and LEDs

The ***main power circuit breaker switch*** (labeled *Main Power*) is located on the power panel at the lower right corner of the right side panel of the MS detector. See Figure 2-6 and Figure 2-7. In the Off (O) position, the circuit breaker removes all power to the MS detector, including the vacuum pumps. In the On (|) position, power is supplied to the MS detector. In the standard operational mode, the circuit breaker is kept in the On (|) position.

The ***electronics service switch*** (labeled *Electronics*) is located on the power panel. In the Service position the switch removes power to all components of the MS detector other than the vacuum system. In the Operating position power is supplied to all components of the MS detector.

> **Note.** To shut off all power to the MS detector in an emergency, place the main power circuit breaker switch (labeled *Main Power*) in the Off (O) position. Do not use the electronics service switch (labeled *Electronics*).

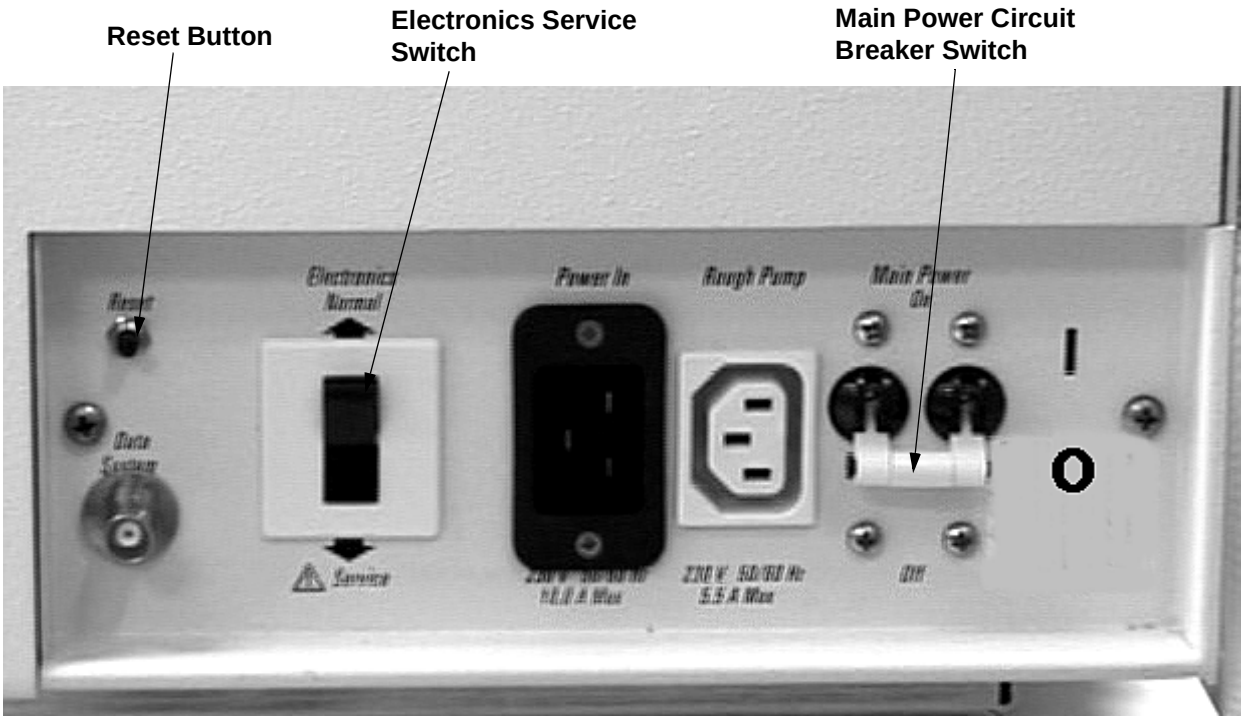

Figure 2-6. LCQ Advantage MAX Power Panel

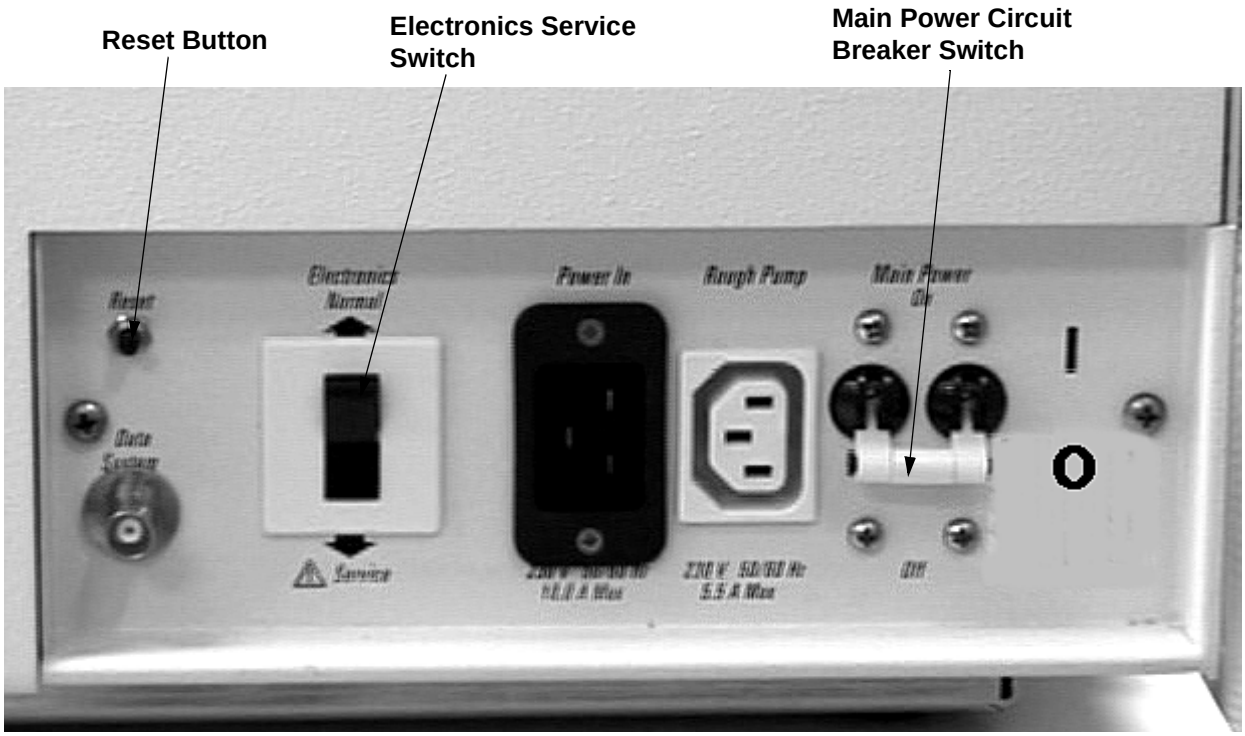

Figure 2-7. LCQ Deca XP MAX Power Panel

The ***reset button*** (labeled *Reset*) is also located on the power panel. When you press the reset button for longer than 3 s, LCQ Series MS detector software is reloaded from the data system. Refer to the topic **Resetting the MS Detector** in the **System Shutdown, Startup, and Reset** chapter for information on resetting the MS detector.

API Source

The ***atmospheric pressure ionization (API) source*** forms gas phase sample ions from sample molecules that are contained in solution. The API source also serves as the interface between the LC and the MS detector. You can operate the API source using either the electrospray ionization (ESI), atmospheric pressure chemical ionization (APCI), or nanospray ionization (NSI) technique.

For information about the ESI and APCI probes, refer to the **Finnigan Ion Max API Source Hardware Manual**. For more information on NSI, refer to the **LCQ Series Nanospray Ion Source Operator's Manual.**

API Stack

The ***API stack*** consists of the components of the API source that are held under vacuum, except for the atmospheric pressure side of the spray shield, and the components of the ion sweep. The API stack includes the spray shield, ion sweep cone, spray cone, ion transfer capillary, heater assembly, vent prevent ball valve, extension mount, tube lens, skimmer, and tube lens and skimmer mount. See Figure 2-8. The same API stack is used for ESI, APCI, and NSI ionization techniques.

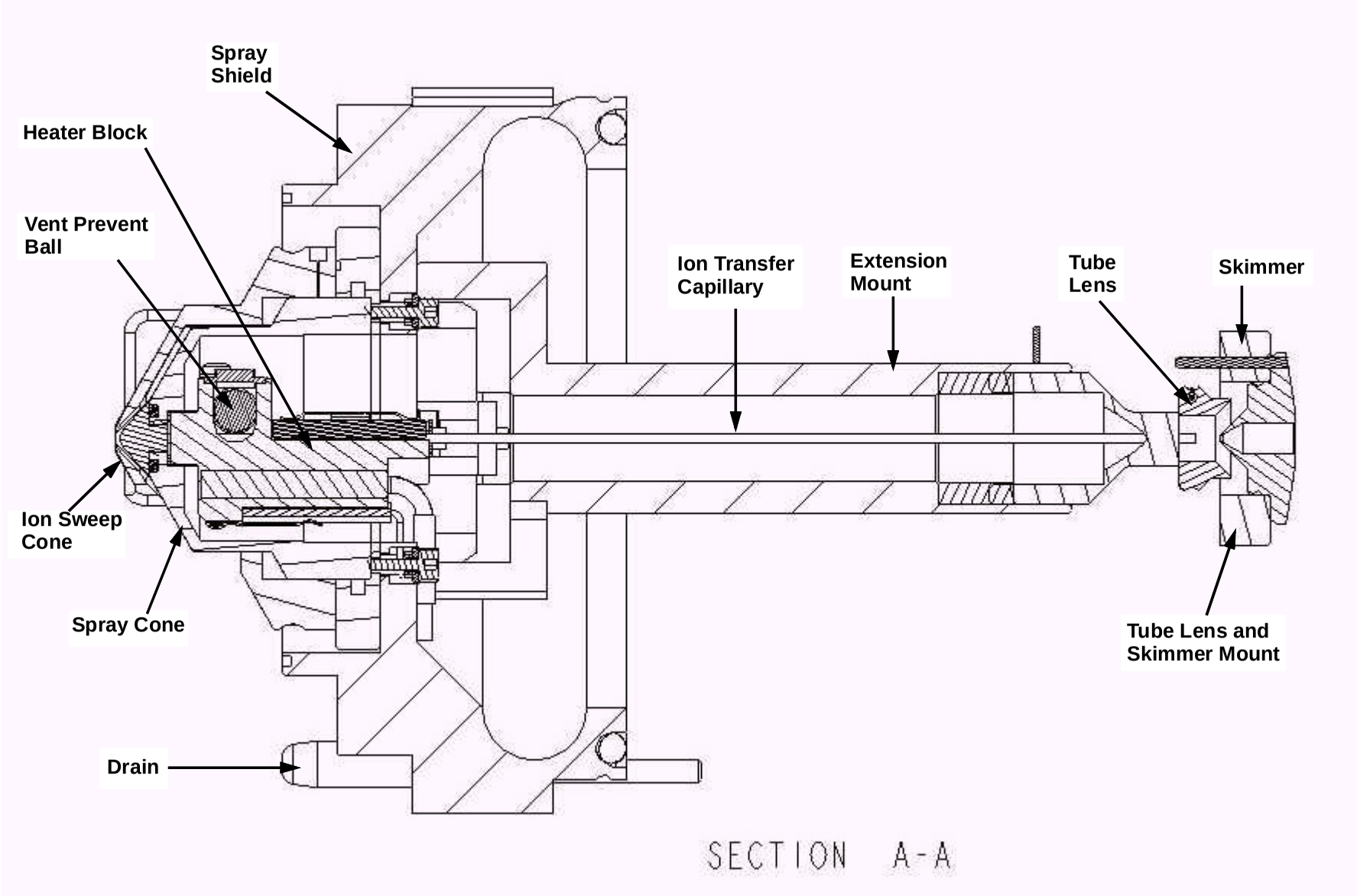

Figure 2-8. Cross sectional view of the API stack

The ***spray shield*** is a stainless steel cylindrical vessel that, in combination with the ESI, APCI, or NSI flange, and the spray cone, forms the atmospheric pressure region of the API source (also called the spray chamber). The spray shield inserts into an opening in the vacuum manifold and serves as a base for the API stack. An opening in the bottom of the spray shield serves as a drain for waste liquid. Two flange retainer bolts on the ESI, APCI, or NSI flange secure the flange to the atmospheric pressure side of the spray chamber.

The ***ion sweep cone*** is the outer stainless steel cone that is held by the spray cone. The ***spray cone*** is a stainless steel cone that fastens to the spray shield. The ion sweep cone is usually placed in one of two positions on the spray cone. This allows the distance between the opening of the ion sweep cone and the opening of the ion transfer capillary (see below) to be set to one of two definite values. Nitrogen can be made to flow in the gap between the ion sweep cone and the spray cone, and to exit the openings of the ion sweep cone.

The ***ion transfer capillary*** is an elongated cylindrical stainless steel tube that is attached to the spray cone. The ion transfer capillary assists in desolvating ions that are produced by the ESI, APCI, or NSI probes. Ions are focused into the ion transfer capillary in the atmospheric pressure region and transported to the skimmer region of the vacuum manifold by a decreasing pressure gradient and electrostatic forces. The ion transfer capillary can be heated to 300 ºC. Typical temperatures of the ion transfer capillary are 200 °C for ESI, 150 °C for APCI, and 165 °C for NSI.

The ***heater assembly*** is a dual cartridge heater that surrounds the ion transfer capillary but is not connected to the ion transfer capillary. The ion transfer capillary passes through a ***vent prevent ball valve*** that automatically seals if the ion transfer capillary is removed. Therefore, the ion transfer capillary may be removed and replaced without venting the instrument.

The ***extension mount*** is a combined tube and flange–like part that mounts to the spray shield. The extension mount surrounds the ion transfer capillary and is a mount for the tube lens and skimmer mount.

Ions from the ion transfer capillary enter the ***tube lens***. The tube lens has a mass dependent potential applied to it to focus the ions towards the opening of the skimmer (see below). An additional potential of between 0 and ±200 V (positive for positive ions and negative for negative ions), called the ***tube lens offset voltage***, can be applied to the tube lens to accelerate the ions into background gas that is present in the skimmer region. Collisions with the background gas aid in the desolvation of the ions and increase sensitivity. If the tube lens offset voltage is too high, however, collisions with the background gas can be energetic enough to cause the ions to fragment. This fragmentation, called ***ion source collision induced dissociation*** (CID), decreases sensitivity. When you tune LCQ Advantage, you adjust the tube lens offset voltage to maximize sensitivity by balancing desolvation with fragmentation.

The tube lens also serves as a gate to stop the injection of ions into the mass analyzer. A potential of -200 V is used to deflect positive ions away from the opening in the skimmer, and a potential of +200 V is used to deflect negative ions away from the opening in the skimmer.

Ions from the tube lens pass through the skimmer and move toward the first octapole. The ***skimmer*** acts as a vacuum baffle between the higher pressure skimmer region (at 1 Torr) and the lower pressure first octapole region (at 10^{-3} Torr) of the vacuum manifold. The skimmer is at ground potential. The bore of the ion transfer capillary is mechanically offset with respect to the opening in the skimmer to reduce the number of neutral molecules and large charged particles that pass through the skimmer and create detector noise.

The distance between the vacuum end of the ion transfer capillary and the entrance to the skimmer is important. The extension mount, and of the tube lens and skimmer mount facilitate control of this distance. The ***tube lens and skimmer mount*** is inserted into the end of the extension mount. The tube lens and skimmer mount compresses a spring in the extension mount and is held in place by a retaining fork. This causes the entrance of the skimmer to be set at a fixed distance from the exit of the ion transfer capillary.

Ion Optics

The LCQ Series MS detector uses magnetic fields to direct and focus the ion stream coming from the source. This section contains information on the ion optics for LCQ Advantage MAX and LCQ Deca XP MAX.

LCQ Advantage MAX

In the LCQ Advantage MAX, ions enter the ion optics after passing through the skimmer. The ***ion optics*** transmit ions from the API source to the mass analyzer. The ion optics consist of an octapole, a split octapole, and an interoctapole lens. See Figure 2-9 and Figure 2-16. Each ***octapole*** is an octagonal array of cylindrical rods that acts as an ion transmission device. An RF voltage (2.45 MHz, 400 V peak to peak) and dc offset voltage (typically -10 to +10 V) that are applied to the rods give rise to an electric field that guides the ions along the axis of the octapole. During ion transmission, the offset voltage is negative for positive ions and positive for negative ions. The octapole RF voltage is turned off during mass analysis.

The ***split octapole*** has four leads instead of two and can act as a gate as well as an ion transmission device. To terminate ion transmission, LCQ Advantage MAX applies a +150 V potential to the rods on one side of the octapole and –150 V to the other side.

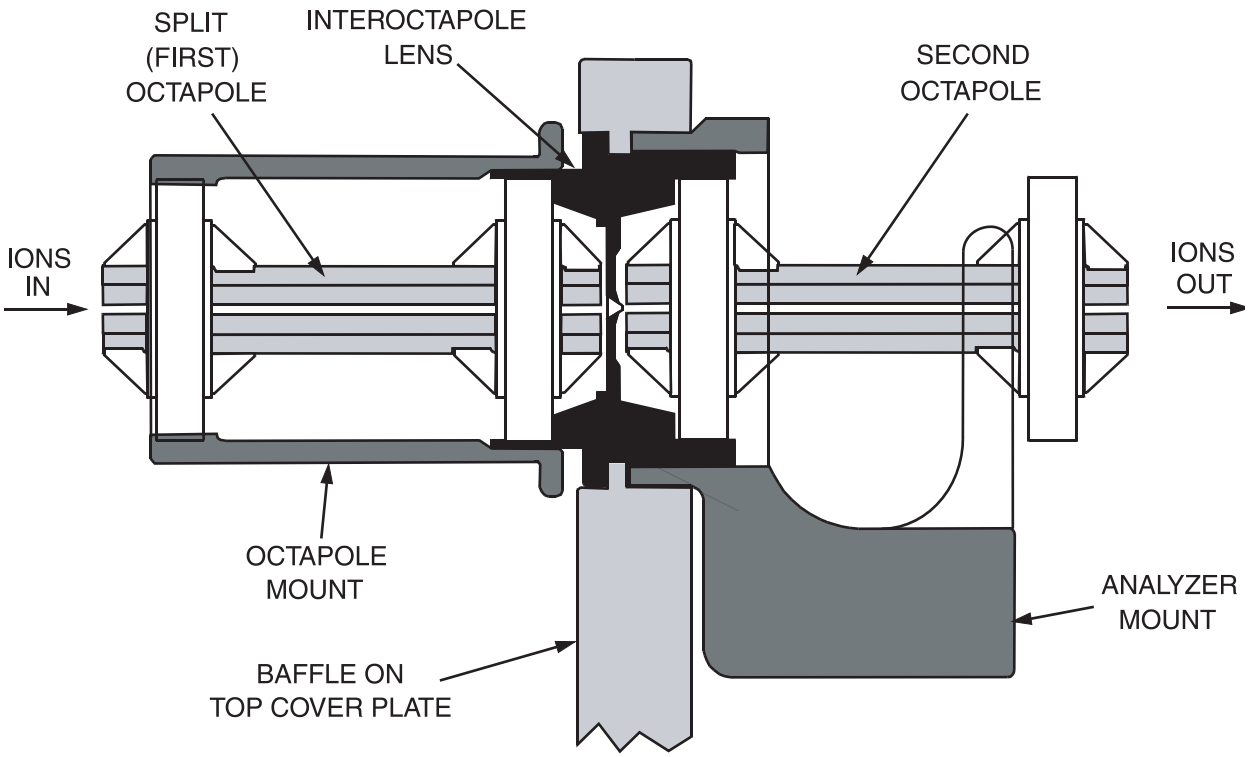

Figure 2-9. Cross sectional view of the LCQ Advantage MAX ion optics

The split (first) octapole and the second octapole are separated by the interoctapole lens. The ***interoctapole lens*** assists in the focusing and gating of ions. The interoctapole lens also serves as a baffle between the first octapole region and the analyzer region of the vacuum manifold. The LCQ Advantage MAX tune procedure optimizes the potentials that are applied to the octapoles and interoctapole lens to maximize the ion current to the mass analyzer. During ion transmission, a potential of typically between -20 and +20 V is applied to the interoctapole lens. The potential is negative for positive ions and positive for negative ions. To terminate ion transmission during mass analysis, LCQ Advantage MAX applies a +132 V potential for positive ions or –132 V potential for negative ions.

LCQ Deca XP MAX

Ions enter the ion optics after passing through the skimmer. The ion optics transmit ions from the API source to the mass analyzer. The ion optics consist of one quadrupole, one octapole, and an interoctapole lens. See Figure 2-10.

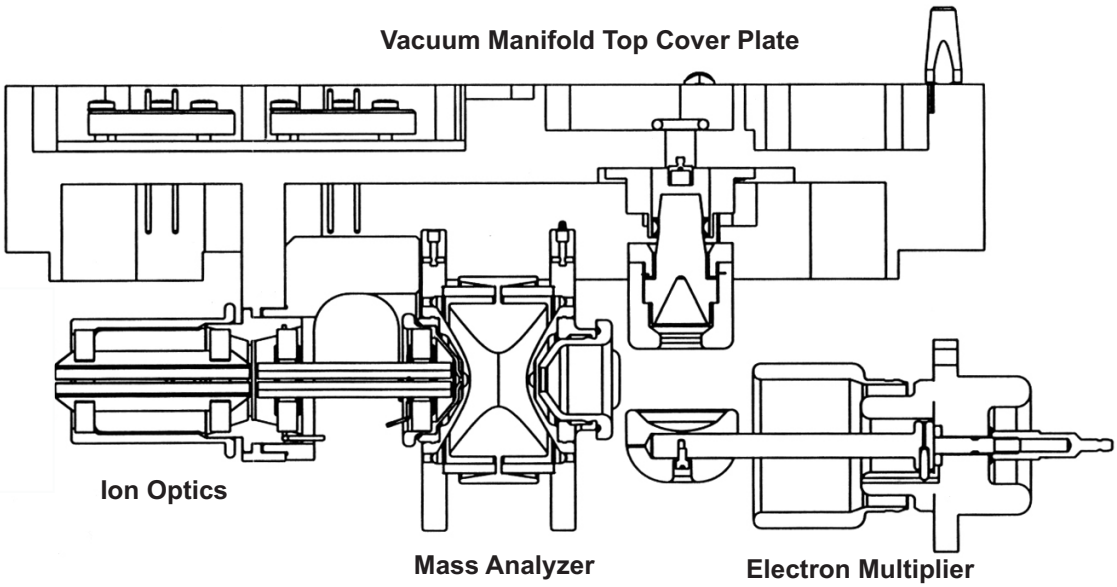

Figure 2-10. Cross sectional view of the LCQ Deca XP MAX ion optics

The quadrupole is a quadrilateral array of square rods that acts as an ion transmission device. An RF voltage (2.45 MHz, 400 V peak to peak) and dc offset voltage (typically -10 to +10 V) that are applied to the rods give rise to an electric field that guides the ions along the axis of the quadrupole. During ion transmission, the offset voltage is negative for positive ions and positive for negative ions.

The octapole is an octagonal array of cylindrical rods that acts as an ion transmission device. An RF voltage (2.45 MHz, 400 V peak to peak) and dc offset voltage (typically -10 to +10 V) that are applied to the rods give rise to an electric field that guides the ions along the axis of the octapole. During ion transmission, the offset voltage is negative for positive ions and positive for negative ions. The quadrupole/octapole RF voltage is turned off during mass analysis.

The quadrupole and octapole are separated by the interoctapole lens. The interoctapole lens assists in the focusing and gating of ions. The interoctapole lens also serves as a baffle between the quadrupole region and the analyzer region of the vacuum manifold. The LCQ Deca XP tune procedure optimizes the potentials that are applied to the quadrupole, octapole, and interoctapole lens to maximize the ion current to the mass analyzer. During ion transmission, a potential of typically between -20 and +20 V is applied to the interoctapole lens. The potential is negative for positive ions and positive for negative ions. During mass analysis, the potential is +130 V for positive ions and -130 V for negative ions.

Mass Analyzer

The quadrupole ion trap ***mass analyzer*** is the site of mass analysis (that is, ion storage, ion isolation, collision induced dissociation, and ion scan out). This section describes the components of the mass analyzer, the voltages applied to the mass analyzer electrodes, the use of helium damping gas in the mass analyzer cavity, and the operation of the mass analyzer during mass analysis.

Components of the Mass Analyzer

The mass analyzer is mounted on the analyzer mount opposite the second octapole. The mass analyzer is shown in cross section in Figure 2-11 and in a photograph in Figure 2-16.

The mass analyzer includes three stainless steel electrodes: the entrance endcap electrode; the exit endcap electrode; and the ring electrode. The inner surfaces of the electrodes are hyperbolic. Together, they form a cavity in which the mass analysis occurs.

The ***entrance endcap electrode*** is the electrode that is closest to the ion optics, and the ***exit endcap electrode*** is the electrode that is closest to the ion detection system. Both endcap electrodes have a small hole in their centers to permit the passage of ions into and out of the mass analyzer cavity. The ***ring electrode*** is located between the endcap electrodes. Ions produced in the API source enter the mass analyzer cavity through the entrance endcap electrode. Ions can be ejected through either endcap electrode during mass analysis. Ions that are ejected through the exit endcap electrode are focused by the conversion dynode accelerating potential through the ***exit lens*** (at ground potential) towards the ion detection system. Helium damping gas enters the mass analyzer cavity through a nipple on the exit endcap electrode.

The entrance endcap electrode, exit endcap electrode, and ring electrode are separated by two quartz spacer rings. The ***spacer rings*** position the electrodes at the proper distance apart and also serve as electrical insulators. Two nonconducting ***posts*** pass through both endcap electrodes and screw into the analyzer mount (also nonconducting). A ***spring washer*** and ***nut*** on the end of each post apply a force to the exit endcap electrode that holds the electrodes and spacers in place.

The ***mass analyzer dc offset voltage*** is applied to the mass analyzer electrodes to draw in ions from the ion optics. The magnitude of the mass analyzer dc offset voltage is -10 V for positive ion polarity mode and +10 V for negative ion polarity mode.

Various ac voltages are applied to the ring and endcap electrodes to trap, fragment, and eject ions according to their mass-to-charge ratios. These ac voltages, referred to as the ring electrode RF voltage, waveform voltage, resonance excitation RF voltage, and resonance ejection RF voltage, are discussed below.

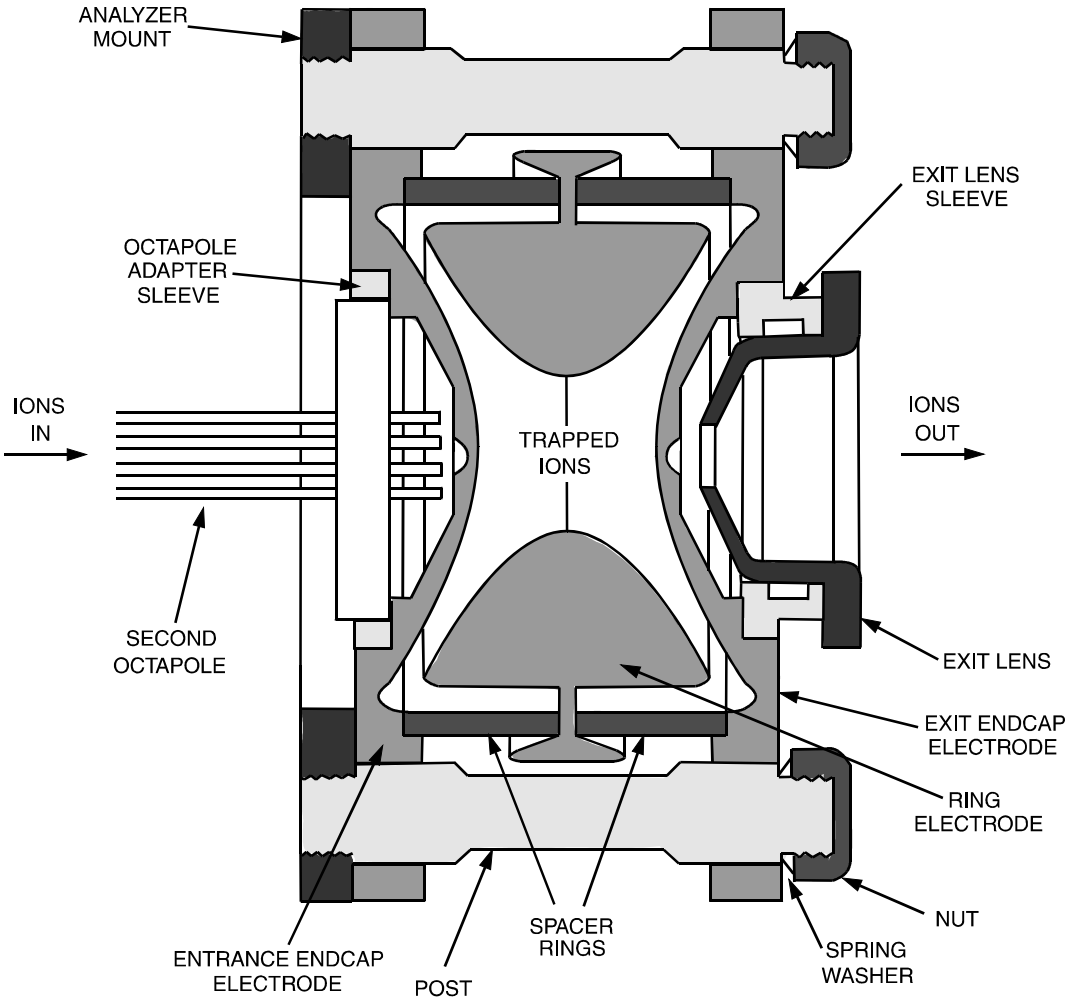

Figure 2-11. Cross sectional view of the mass analyzer

Ring Electrode RF Voltage

An ac voltage of constant frequency (0.76 MHz) and variable amplitude (0 to 8500 V zero-to-peak) is applied to the ring electrode by a spring-loaded pin that contacts the ring electrode when the mass analyzer is in place. The frequency of the ac voltage is in the radio-frequency (RF) range, and this voltage is referred to as the ***ring electrode RF voltage***.

The application of an RF voltage to the ring electrode produces a three-dimensional quadrupole field within the mass analyzer cavity. This time-varying field drives ionic motion in both the axial (toward the endcaps) and radial (from the ring electrode toward the center) directions. Ionic motion must be stable in both the axial and radial directions for an ion to remain trapped. (A stable trajectory is an oscillatory trajectory that is confined within

the mass analyzer.) During ion scan out, the system produces a mass-dependent instability to eject ions from the mass analyzer in the axial direction.

When the amplitude of the ring electrode RF voltage is low, all ions above a minimum mass-to-charge ratio are trapped. This RF voltage is referred to as the ***storage voltage***, and the minimum mass-to-charge ratio is usually chosen to be greater than the mass-to-charge ratios associated with air, water, and solvent ions. During ion scan out, the ring electrode RF voltage is ramped at a constant rate corresponding to approximately 5,500 u/s. As the ring electrode RF voltage increases, ions of increasing mass-to-charge ratio become successively unstable in the axial direction and are ejected from the mass analyzer. The voltage at which an ion is ejected from the mass analyzer is defined as its ***resonance voltage***. The ejection of ions of each mass-to-charge ratio occurs over a very short time. Many of these ions are detected by the ion detection system.

Ion Isolation Waveform Voltage, Resonance Excitation RF Voltage, and Resonance Ejection RF Voltage Applied to the Endcap Electrodes

The ion isolation waveform voltage, resonance excitation RF voltage, and resonance ejection RF voltage are ac voltages that are applied to the endcap electrodes to stimulate motion of the ions in the axial direction. The voltages applied to the endcap electrodes are equal in amplitude but are 180° out of phase to one another. When the RF frequency applied to the endcaps equals the resonance frequency of a trapped ion, which depends on its mass, the ion gains kinetic energy. If the magnitude of the applied voltage is large enough or the ion is given sufficient time, the ion is ejected from the mass analyzer in the axial direction.

The ***waveform voltage*** consists of a distribution of frequencies between 5 and 380 kHz containing all resonance frequencies except for those corresponding to the ions to be trapped. The ***ion isolation waveform voltage*** acts during the ion isolation step of SIM, SRM, and MS/MS full scan applications. The ion isolation waveform voltage, in combination with the ring electrode RF voltage, ejects all ions except those of a selected mass-to-charge ratio or narrow ranges of mass-to-charge ratios. The ion isolation waveform voltage is calculated by the LCQ Series MS detector and automatically applied at the correct time.

During the collision induced dissociation step of SRM, and MS/MS full scan applications, the ***resonance excitation RF voltage*** is applied to the endcap electrodes to fragment parent ions into product ions. The resonance excitation RF voltage is not strong enough to eject an ion from the mass analyzer. However, ion motion in the axial direction is enhanced and the ion gains

kinetic energy. After many collisions with the helium damping gas, which is present in the mass analyzer, the ion gains enough internal energy to cause it to dissociate into product ions. The product ions are then mass analyzed.

During ion scan out, the ***resonance ejection RF voltage*** facilitates the ejection of ions from the mass analyzer and thus improves mass resolution. The resonance ejection RF voltage is applied at a fixed frequency and increasing amplitude during the ramp of the ring electrode RF voltage. Only when an ion is about to be ejected from the mass analyzer cavity by the ring electrode RF voltage is it in resonance with the resonance ejection RF voltage. When an ion approaches resonance, it moves farther away from the center of the mass analyzer, where the field generated by the ring electrode RF voltage is zero (and space-charge effects are strong), into a region where the field produced by the ring electrode RF voltage is strong (and space-charge effects are small). As a result, the ejection of the ion is facilitated, and mass resolution is significantly improved.

Helium Damping Gas in the Mass Analyzer Cavity

The mass analyzer cavity contains helium that is used as a damping gas and a collision activation partner. The helium damping gas enters the mass analyzer cavity through a nipple on the exit endcap electrode. The flow of gas (~1 mL/min) into the mass analyzer cavity is regulated by a pressure regulator and a capillary restrictor. The flow of gas out of the mass analyzer cavity (and into the turbomolecular pump) is restricted by the holes in the endcap electrodes. The flows into and out of the cavity are matched so that the partial pressure of helium in the mass analyzer cavity is maintained at approximately 0.1 Pa (10^{-3} Torr).

The collisions of the ions entering the mass analyzer with the helium slow the ions so they can be trapped by the RF field in the mass analyzer.

The presence of helium in the mass analyzer cavity significantly enhances sensitivity and mass spectral resolution. Before their ejection from the mass analyzer cavity, sample ions collide with helium atoms. These collisions reduce the kinetic energy of the ions, thereby damping the amplitude of their oscillations. As a result, the ions are focused into the center of the cavity rather than being allowed to spread throughout the cavity.

Helium in the mass analyzer cavity also serves as a collision activation partner. During the collision induced dissociation step of an SRM or MS/MS full scan analysis, the resonance excitation RF voltage applied to the endcap electrodes drives parent ions into the helium atoms. After gaining sufficient internal energy from the resulting collisions, the parent ion dissociates into one or more product ions.

Summary of Mass Analyzer Operation

The processes that occur in the mass analyzer can be broken down into four steps:

- Ion storage
- Ion isolation (SIM, SRM, and MS/MS full scan only)
- Collision induced dissociation (SRM and MS/MS full scan only)
- Ion scan out (the ion detection step)

For SRM and MS/MS full scan applications the ion isolation and collision induced dissociation steps are performed once.

Before ion storage, the following conditions are established:

- Helium is present in the mass analyzer cavity at a partial pressure of about 0.1 Pa (10^{-3} Torr).
- Ring electrode RF voltage is set to the storage voltage.
- Ion isolation waveform voltage, resonance excitation RF voltage, and resonance ejection RF voltage on the endcap electrodes are off.

With these conditions achieved, sample ions formed in the API source are trapped in the mass analyzer if the ions have mass-to-charge ratios greater than the minimum storage mass-to-charge ratio.

Next, for SIM, SRM, MS/MS, and MS^n full scan analyses, the ion isolation waveform voltage is applied to the endcap electrodes, in combination with a ramp of the ring electrode RF voltage to a new storage voltage, to eject all ions except those of the selected mass-to-charge ratio.

Then, for SRM, MS/MS, and MS^n full scan analyses, the resonance excitation RF voltage is applied to the endcap electrodes to cause collision induced dissociation. Product ions with mass-to-charge ratio greater than the minimum storage mass-to-charge ratio are stored. (The minimum storage mass during collision induced dissociation is typically set to one quarter of the parent ion mass-to-charge ratio.)

For SRM and MS/MS full scan applications the ion isolation and collision induced dissociation steps are performed once. For MS^n full scan applications these steps are performed multiple times.

Finally, the sample ions or product ions are scanned out: The ring electrode RF voltage is ramped from low voltage to high voltage, and simultaneously the resonance ejection RF voltage is applied to the endcap electrodes to facilitate ejection. As the ring electrode RF voltage is increased, ions of greater and greater mass-to-charge ratios become unstable and are ejected from the mass analyzer. Many of these ions are focused toward the ion detection system where they are detected.

Ion Detection System

The LCQ Series MS detector is equipped with a high sensitivity, off-axis ***ion detection system*** that produces a high signal-to-noise ratio and allows for voltage polarity switching between positive ion and negative ion modes of operation. The ion detection system includes a 15-kV conversion dynode and a channel electron multiplier. The ion detection system is located at the rear of the vacuum manifold behind the mass analyzer. See Figure 2-12 (cross sectional view), Figure 2-15 (conversion dynode), and Figure 2-16 (electron multiplier).

The ***conversion dynode*** is a concave metal surface that is located at a right angle to the ion beam. A potential of +15 kV for negative ion detection or -15 kV for positive ion detection is applied to the conversion dynode. When an ion strikes the surface of the conversion dynode, one or more secondary particles are produced. These secondary particles can include positive ions, negative ions, electrons, and neutrals. When positive ions strike a negatively charged conversion dynode, the secondary particles of interest are negative ions and electrons. When negative ions strike a positively charged conversion dynode, the secondary particles of interest are positive ions. These secondary particles are focused by the curved surface of the conversion dynode and are accelerated by a voltage gradient into the electron multiplier. The conversion dynode ***shield tube*** and ***shield disk*** shield the vacuum manifold from the electric field produced by the conversion dynode.

The electron multiplier is mounted on the top cover plate of the vacuum manifold next to the mass analyzer. See Figure 2-12 and Figure 2-16. The ***electron multiplier*** includes a cathode and an anode. The ***cathode*** of the electron multiplier is a lead-oxide, funnel-like resistor. A potential of up to -2.5 kV is applied to the cathode by the ***high voltage ring***. The exit end of the cathode (at the anode) is near ground potential. The cathode is held in place by the high voltage ring, two ***support plates***, the ***electron multiplier support***, and the ***electron multiplier shield***. A spring washer applies a force to the cathode to hold it in contact with the electron multiplier shield. The electron multiplier support is attached to the top cover plate of the vacuum manifold by two screws.

The ***anode*** of the electron multiplier is a small cup located at the exit end of the cathode. The anode collects the electrons produced by the cathode. The anode screws into the anode feedthrough in the top cover plate.

Secondary particles from the conversion dynode strike the inner walls of the electron multiplier cathode with sufficient energy to eject electrons. The ejected electrons are accelerated farther into the cathode, drawn by the increasingly positive potential gradient. Due to the funnel shape of the cathode, the ejected electrons do not travel far before they again strike the inner surface of the cathode, thereby causing the emission of more electrons. Thus, a cascade of electrons is created that finally results in a measurable

current at the end of the cathode where the electrons are collected by the anode. The current collected by the anode is proportional to the number of secondary particles striking the cathode.

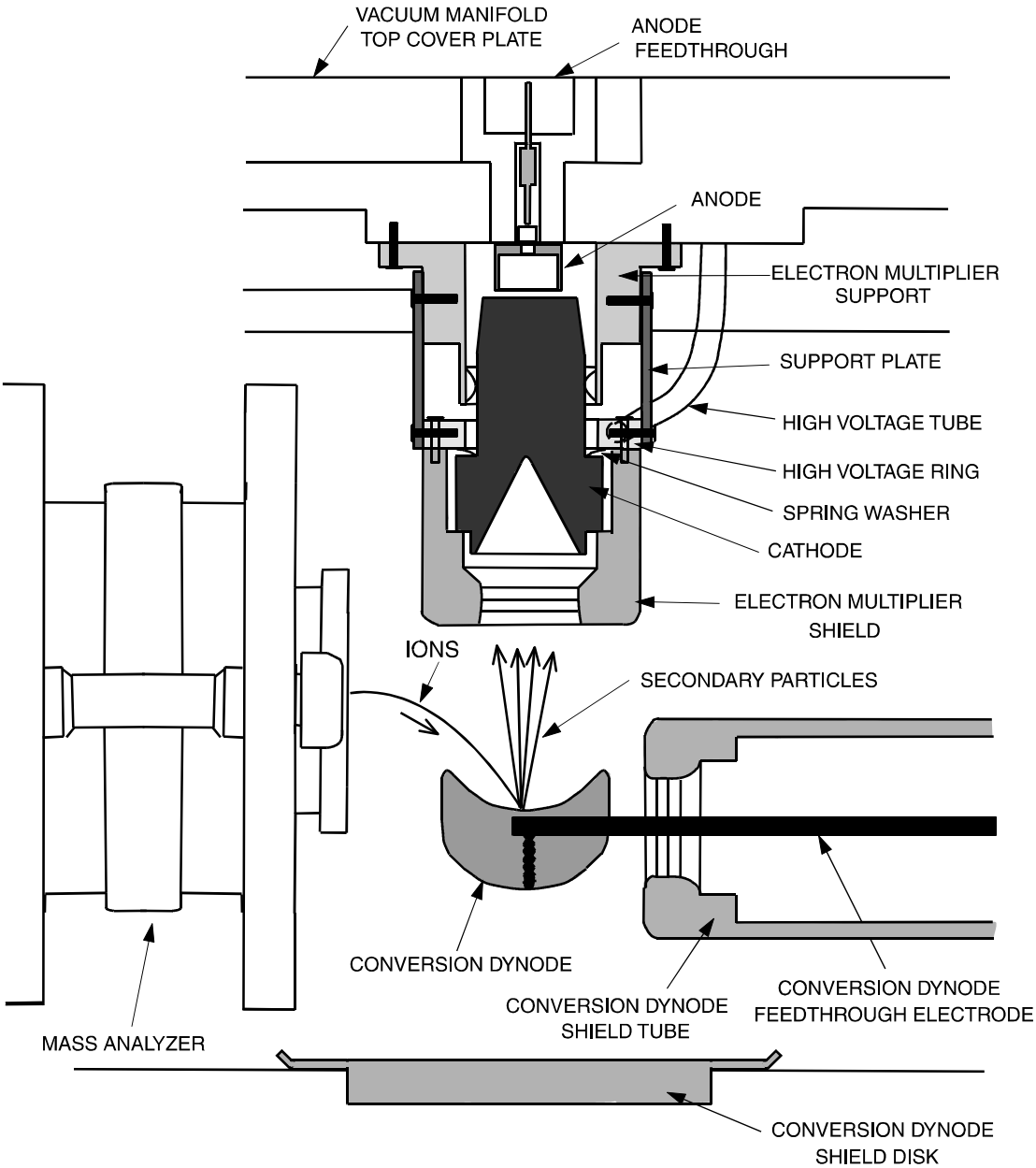

Figure 2-12. Cross sectional view of the ion detection system, showing the electron multiplier and the conversion dynode

Typically, the electron multiplier is set to a gain of about 3×10^5 (that is, for each ion or electron that enters, 3×10^5 electrons exit). The electrometer circuit converts this signal current into a voltage that is recorded by the data system. Refer to the topic **Ion Detection System Electronic Assemblies** on page 2-42.

The ion detection system of the LCQ Series MS detector increases signal and decreases noise. The high voltage applied to the conversion dynode results in a high conversion efficiency and increased signal. That is, for each ion striking the conversion dynode, many secondary particles are produced. The increase in conversion efficiency is more pronounced for more massive ions than for less massive ions.

Because of the off-axis orientation of the ion detection system relative to the mass analyzer, neutral molecules from the mass analyzer tend not to strike the conversion dynode or electron multiplier. As a result, the noise from neutral molecules is reduced.

Vacuum System and Inlet Gasses Hardware

The ***vacuum system*** evacuates the region around the API stack, ion optics, mass analyzer, and ion detection system. The principal components of the vacuum system include the following:

- Vacuum manifold
- Turbomolecular pump
- Forepump
- Convectron® gauge
- Ion gauge

The ***inlet gasses hardware*** controls the flow of damping gas, sheath gas, AUX/Sweep gas, and air (during venting) into the MS detector. The inlet gasses hardware includes the following components:

- Vent gas valve
- Damping gas inlet assembly
- Sheath gas valve
- Auxiliary gas valve

A functional block diagram of the vacuum system and inlet gasses hardware is shown for the LCQ Advantage MAX MS detector in Figure 2-13 and for the LCQ Deca XP MAX MS detector in Figure 2-14.

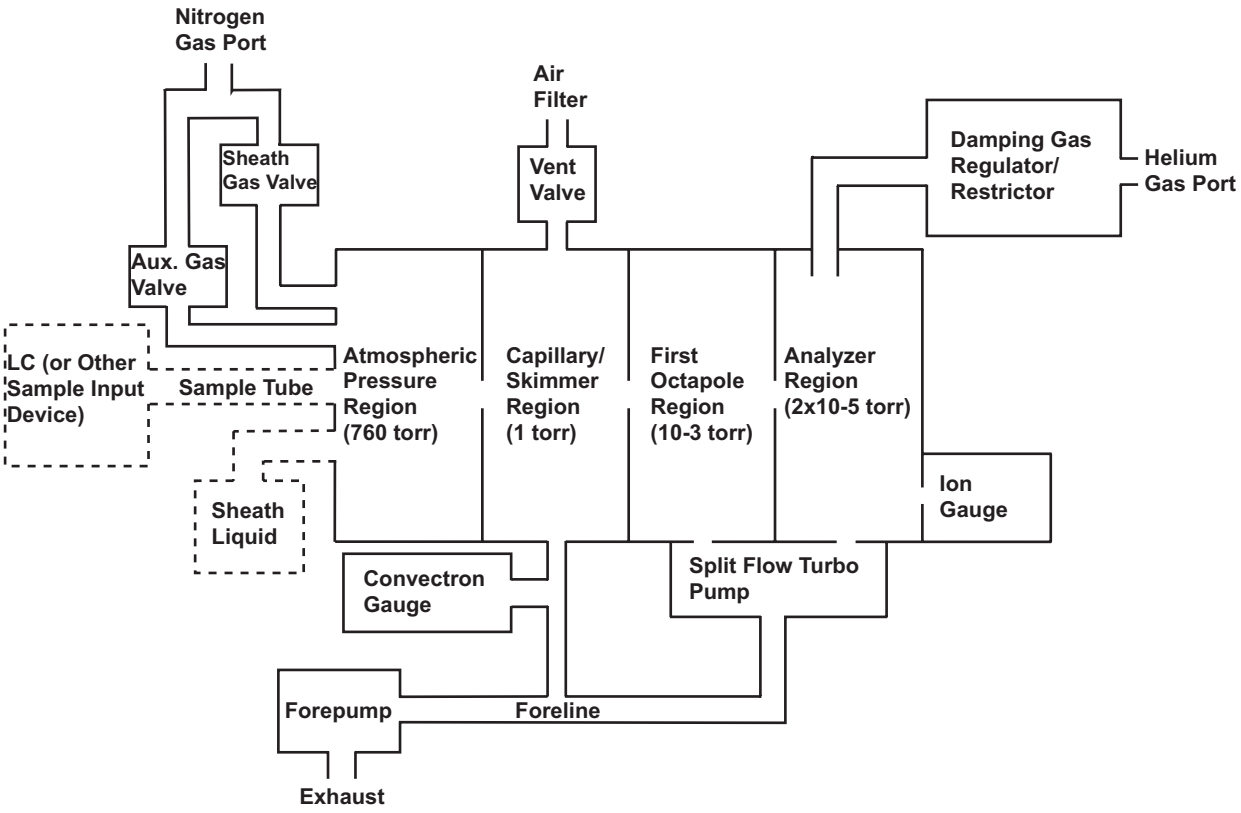

Figure 2-13. Functional block diagram of the LCQ Advantage MAX vacuum system and inlet gasses hardware

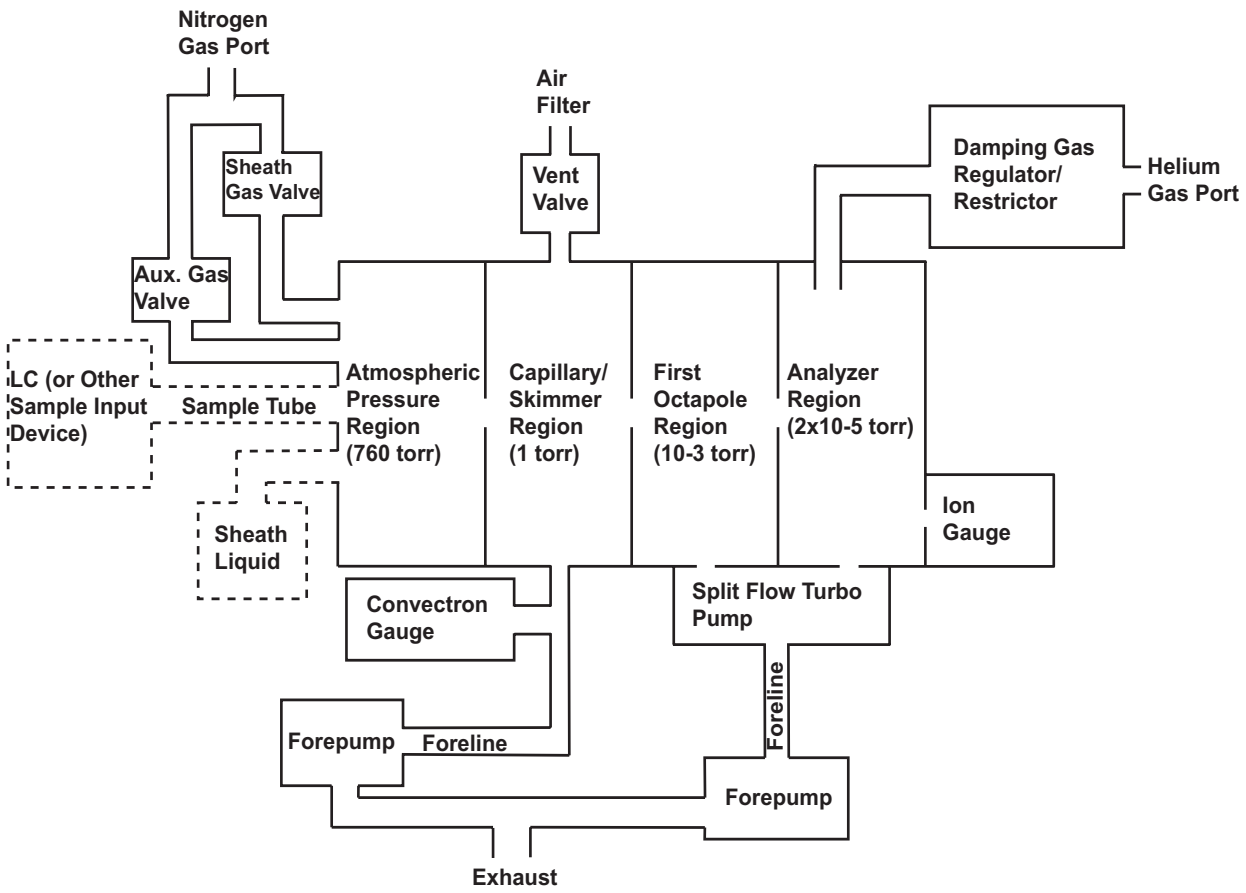

Figure 2-14. Functional block diagram of the LCQ Deca XP MAX vacuum system and inlet gasses hardware

Vacuum Manifold

The ***vacuum manifold*** encloses the API stack, ion optics, mass analyzer, and ion detection system assemblies. The vacuum manifold is a thick-walled, aluminum chamber with a removable top cover plate, machined flanges on the front, sides, and bottom, and various electrical feedthroughs and gas inlets.

The vacuum manifold is divided into three chambers by two baffles. See Figure 2-15. The region inside the first chamber, called the ***ion transfer capillary-skimmer region***, is evacuated to 1 Torr by the forepump. The region inside the second chamber, called the ***first octapole region***, is evacuated to 10^{-3} Torr by the interstage port of the split-flow turbomolecular vacuum pump. The region inside the third chamber, called the ***analyzer region***, is evacuated to 2×10^{-5} Torr by the high vacuum port of the split-flow turbomolecular pump. The turbomolecular pump in turn discharges into the forepump through the foreline.

Two high-voltage electrical feedthroughs pass through the vacuum manifold:

- A feedthrough for the high voltage for the conversion dynode passes through the rear wall
- A feedthrough for the ring electrode RF voltage of the mass analyzer passes through the bottom

An inlet for the introduction of air into the vacuum manifold (for venting the manifold) passes through the front wall of the vacuum manifold. The vacuum manifold also has an opening for the ion gauge.

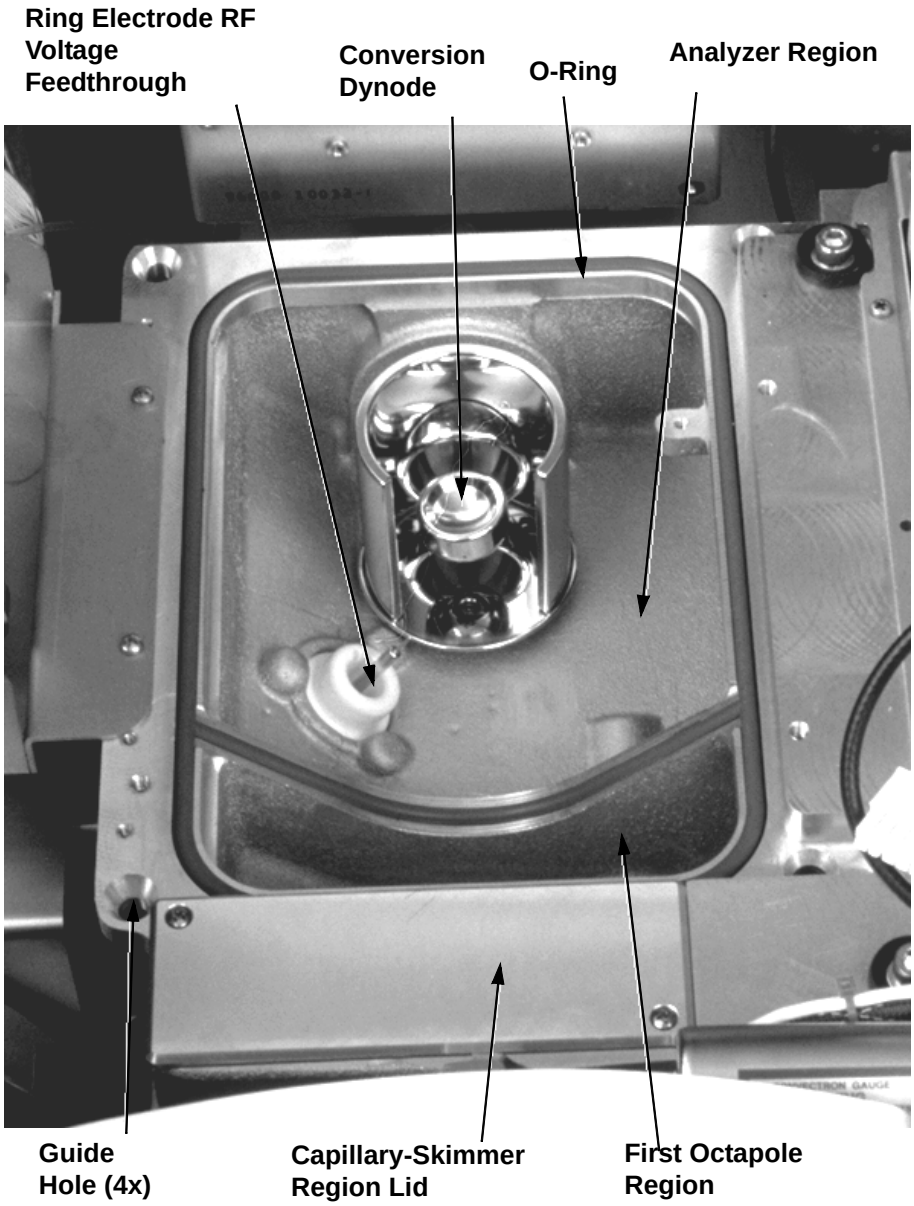

Figure 2-15. Vacuum manifold (interior)

The removable ***top cover plate*** of the vacuum manifold holds the ion optics, mass analyzer, and electron multiplier (one part of the ion detection system). Thus, removal of the top cover plate allows easy access to these assemblies. Two handles on the top and four guide posts on the underside of the top cover plate facilitate its removal and installation. An electrically conductive O-ring provides a vacuum-tight seal between the top cover plate and the vacuum manifold. The top cover plate and its attached assemblies are shown in Figure 2-16.

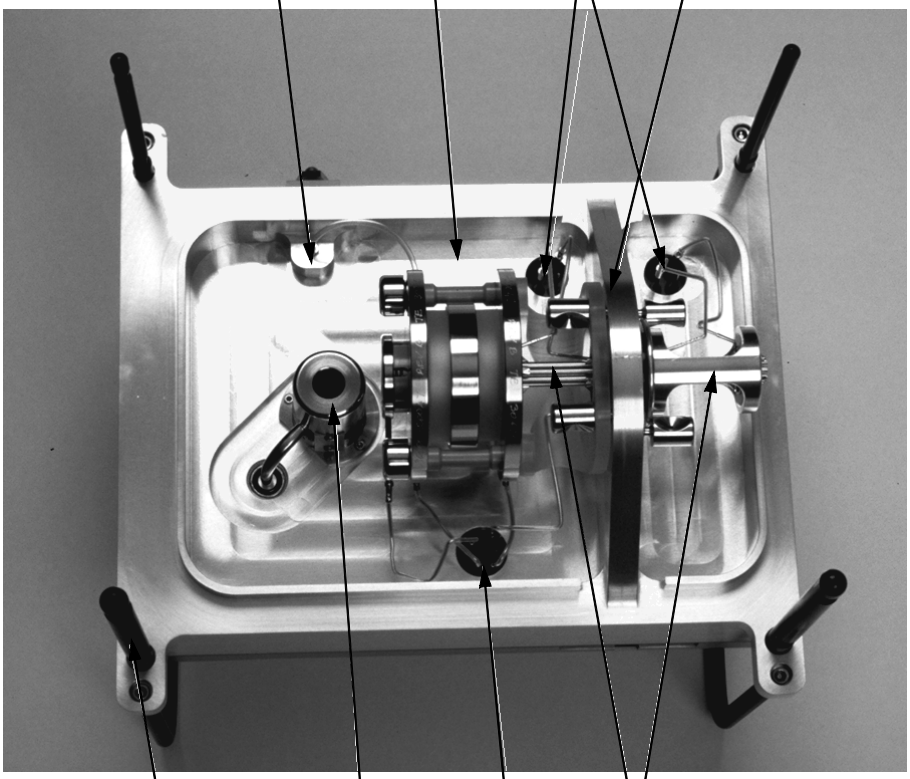

Figure 2-16. Top cover plate of the vacuum manifold (underside) and attached assemblies

Five electrical feedthroughs pass through the top cover plate:

- A 4-pin feedthrough for the split (first) octapole leads
- A 4-pin feedthrough for the second octapole leads
- An 8-pin feedthrough for the leads to the endcap electrodes and exit lens of the mass analyzer, and the interoctapole lens.

- A feedthrough for the high voltage for the cathode of the electron multiplier
- A feedthrough for the ion current signal from the anode of the electron multiplier

An inlet for the introduction of helium damping gas into the mass analyzer passes through the top cover plate.

Turbomolecular Pump

A Pfeiffer TMH 261-130 split-flow ***turbomolecular pump*** provides the vacuum for the first octapole and analyzer regions of the vacuum manifold. The turbomolecular pump mounts onto the underside of the vacuum manifold. The interstage port of the turbomolecular pump, which evacuates the first octapole region, is rated at 100 L/s. The high vacuum port of the turbomolecular pump, which evacuates the analyzer region, is rated at 200 L/s. Under normal operating conditions the pump provides a vacuum of approximately 0.1 Pa (10^{-3} Torr) in the first octapole region, and 2×10^{-3} Pa (2×10^{-5} Torr) in the analyzer region.

Power to and regulation of the turbomolecular pump is provided by a Pfeiffer TC600 Turbomolecular Pump Controller, which is mounted on the turbomolecular pump. Power for the turbomolecular pump is turned off and on by the main power circuit breaker switch but not by the electronics service switch. The pump is air cooled by a fan that draws air in from the rear of the instrument.

Power to the turbomolecular pump is shut off if the foreline pressure, as measured by the Convectron gauge, is too high, or if the turbomolecular pump overheats. Vacuum protection is discussed further in the topic **Vacuum System Electronic Assemblies** on page 2-38.

Forepump

A Edwards E2M30 ***forepump*** (or rough pump) establishes the vacuum necessary for the proper operation of the turbomolecular pump. The forepump also evacuates the ion transfer capillary-skimmer region of the vacuum manifold. The pump has a maximum displacement of 650 L/min and maintains a minimum pressure of approximately 100 Pa (1 Torr).

The forepump is connected to the turbomolecular pump by a section of 2.5 cm (1.0 in.) ID reinforced PVC tubing. The power cord of the forepump is plugged into the outlet labeled *Rough Pump* on the power panel (See

Figure 2-6 on page 2-10). This outlet supplies power to the pump and is controlled by the main power circuit breaker switch and not by the electronics service switch.

> **Caution.** Always plug the forepump power cord into the outlet labeled *Rough Pump* on the right side of the MS detector. Never plug it into a wall outlet.

Convectron Gauge

The ***Convectron gauge*** measures the pressure in the ion transfer capillary-skimmer region of the vacuum manifold and the foreline, which connects the turbomolecular pump and the forepump. The pressure measured by the Convectron gauge is monitored by the System Control PCB. The System Control PCB detects whether the foreline pressure is too high for the proper operation of the turbomolecular pump.

Ion Gauge

The pressure in the analyzer region of the vacuum manifold is measured by a Granville-Phillips® 342™ mini ion gauge. The ***ion gauge*** produces energetic electrons that cause the ionization of molecules in the ion gauge. Positive ions formed in the ion gauge are attracted to a collector. The collector current is related to the pressure in the vacuum manifold. The ion gauge is also involved in vacuum protection.

Vent Valve

The ***vent valve*** allows the vacuum manifold to be vented to air that has been filtered through a sintered nylon filter. The vent valve is a solenoid-operated valve. The vent valve is controlled by the Vent Delay PCB. The vent valve is closed when the solenoid is energized.

The vacuum manifold is vented when power is removed from the MS detector. (Power is removed from the MS detector by a power failure or by placing the main power circuit breaker in the Off (O) position.) A ***battery backup*** on the Vent Delay PCB provides power to the vent valve for 30 s after the power is removed. If external power is not restored to the MS detector in 30 s, a circuit on the Vent Delay PCB times out, and power to the vent valve solenoid is shut off. When power to the vent valve solenoid is shut off, the vent valve opens and the manifold is vented to filtered air. The vent valve closes after power is restored to the MS detector. The battery backup is recharged automatically after power is restored.

Damping Gas Inlet Assembly

The ***damping gas inlet assembly*** controls the flow of helium into the mass analyzer cavity. Helium (40 ±10 psig [275 ±70 kPa], 99.999% [ultra-high] purity) enters the MS detector through a 1/8-in. port labeled *Helium In* on the left side of the MS detector. See Figure 2-17. The LCQ Series MS detector regulates the flow of helium by use of a capillary restrictor and a pressure regulator on the helium line. The helium enters the mass analyzer through a nipple on the exit endcap electrode.

Helium in the mass analyzer cavity dampens ionic motion and improves the performance of the MS detector. Refer to the topic **Helium Damping Gas in the Mass Analyzer Cavity** on page 2-20.

> **Note.** Helium damping gas continues to flow to the mass analyzer even after the MS detector is powered off or placed in Standby. To save helium when the MS detector is not operational, turn off the helium flow at the tank.

Sheath Gas Valve

The ***sheath gas valve*** controls the flow of sheath gas (nitrogen) into the API source. Dry nitrogen (100 ±20 psig [690 ±140 kPa], 99% purity) enters the MS detector through a 1/4-in. port labeled *Nitrogen In* on the left side of the MS detector. See Figure 2-17. The sheath gas pressure is regulated by a valve that is controlled by the data system. You can set the sheath gas flow rate (20 to 100 in arbitrary units) in the ESI Source and APCI Source dialog boxes from the Tune Plus window. Sheath gas is not used with an NSI source. The sheath gas enters the API source through 1/8-in. ID tubing.

In the event that sheath gas flow is lower than that required for operation, the LCQ Series MS detector displays a message and places the system in Standby mode.

Auxiliary Gas Valve

The ***auxiliary gas valve*** controls the flow of nitrogen through the Auxiliary (AUX) gas or Sweep gas inlets into the API source. Dry nitrogen (690 ±140 kPa [100 ±20 psig], 99% purity) enters the MS detector through a 1/4-in. port labeled *Nitrogen In* on the left side of the MS detector. The auxiliary gas pressure is regulated by a flow valve that is controlled by the data system. You can set the AUX/Sweep gas flow rate (0 to 60 in arbitrary units) in the ESI Source and APCI Source dialog boxes. Refer to the **LCQ™**

Series Nanospray Ion Source Operator's Manual for a discussion of the use of auxiliary gas with the NSI source. The auxiliary gas enters the API source through 1/8-in. ID tubing.

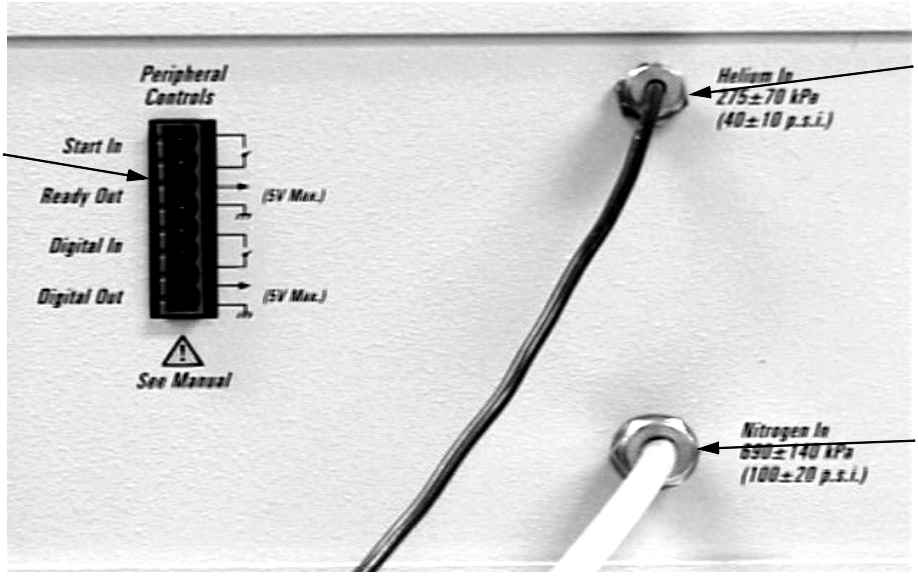

Figure 2-17. I/O panel

Cooling Fans

Five 2800 L/min (100 ft^3/min) fans provide cooling for the MS detector. One fan cools the RF voltage coil. Two fans cool the electronics in the tower. One fan cools the electronics in the embedded computer. One fan cools the turbomolecular pump. The exhaust air is expelled from the vent slots on the sides of the MS detector.

+24 V dc power to the fans is provided by the +48, +24 V dc switching power supply.

> **Caution**. To ensure proper cooling, the MS detector must always be operated with its covers in place.

Electronic Assemblies

The electronic assemblies that control the operation of the MS detector are distributed among various printed circuit boards (PCBs) and other modules located in the tower, embedded computer, and on or around the vacuum manifold of the MS detector.

The electronic assemblies of the MS detector include the following:

- Power Module and power distribution assemblies

- System Control PCB
- Vacuum system electronic assemblies
- RF/waveform voltage generation electronic assemblies
- Ion detection system electronic assemblies
- Embedded computer electronic assemblies

Functional block diagrams of the electronic assemblies and their interconnection with the various components of the MS detector are shown in Figure 2-18 through Figure 2-23.

Power Module and Power Distribution

The ***Power Module*** accepts line power, filters it, and provides it to various components of the MS detector. The Power Module includes the following components:

- Main power circuit breaker
- Surge suppressor
- Line filter
- Electronics service switch

A functional block diagram of the Power Module and MS detector power distribution is shown in Figure 2-18.

Line power of 230 V ac ± 10%, 10 A, 50/60 Hz, single phase enters the power panel on the right side panel of the MS detector, passes through the main power circuit breaker, surge suppressor, and then to a line filter and either one or two outlets for the forepumps (the LCQ Advantage MAX has one forepump, while the LCQ Deca XP MAX has two). See Figure 2-6 for the LCQ Advantage MAX and Figure 2-7 for the LCQ Deca XP MAX.

The ***main power circuit breaker switch***, located on the right side panel of the MS detector (see Figure 2-6 and Figure 2-7), shuts off all power to the MS detector, including the vacuum system. After the main power circuit breaker switch, power goes to the rotary vane pump and the surge suppressor.

The ***surge suppressor*** protects the MS detector from surges in the line power.

The ***line filter*** removes noise from the line power.

After the line filter, power goes to the +48, +24 V switching power supply and the electronics service switch.

The ***+48, +24 V switching power supply*** (located in the electronics tower) provides power to the ion transfer capillary heater circuitry, the Turbomolecular Pump Controller (which powers the turbomolecular pump), the embedded computer fan, turbomolecular pump fan, a fan in the electronics

tower to cool the +48, +24 V dc switching power supply, the Vent Delay PCB, and the Service Relay PCB. Refer to the topic **Vacuum System Electronic Assemblies** on page 2-38.

In the LCQ Advantage MAX, the ***Service Relay PCB*** also allows the +48, +24 V dc switching power supply to power the syringe pump, divert valve, ion transfer capillary heater (using +48 V power), and fans for the RF coil and electronics tower if the electronics service switch is in the Operational position.

The ***electronics service switch*** is a circuit breaker that allows you to service the non-vacuum system components of the MS detector with the vacuum system still in operation (See Figure 2-6). In the Service position the switch removes power to all components of the MS detector other than the vacuum system. In the Operational position power is supplied to all components of the MS detector.

> **Note.** For emergency shutoff of all power to the MS detector, place the main power circuit breaker switch in the Off (O) position. Do not use the electronics service switch to remove power to the system in an emergency.

After the electronics service switch, power goes to the +5 V, ±15 V, ±24 V switching power supply, ± the +36 V, -28 V switching power supply, the ±210 V dc linear power supply (for LCQ Advantage MAX) or the AC Toroidal Transformer (for LCQ Deca XP MAX), and the System Control PCB.

The ***+5 V, ±15 V, +24 V dc switching power supply*** provides +5 V dc, ± 15 V dc for general use. The +24 V dc is used by the ion gauge circuit (in LCQ Advantage MAX) and the 8 kV power supply.

The ***+36 V, -28 V dc switching power supply*** provides +36 V dc and -28 V dc power for the RF circuits of the RF Voltage Amplifier PCB and Waveform Amplifier PCB. The enable/inhibit input to this power supply is connected to the vacuum status; outputs of this power supply are shut down when the Vacuum LED is off.

The ***±210 V dc linear power supply*** (for LCQ Advantage MAX) or the ***AC toroidal transformer*** (for LCQ Deca XP MAX) provides± outputs for the lens drivers on the System Control PCB.

The ***8 kV power supply*** delivers voltage to either the ESI needle in the ESI mode, or the corona discharge needle in the APCI mode. Typical operating voltages range between ±3 to ±6 kV. In the ESI mode, the voltage is regulated, whereas in the APCI mode, the current is regulated.

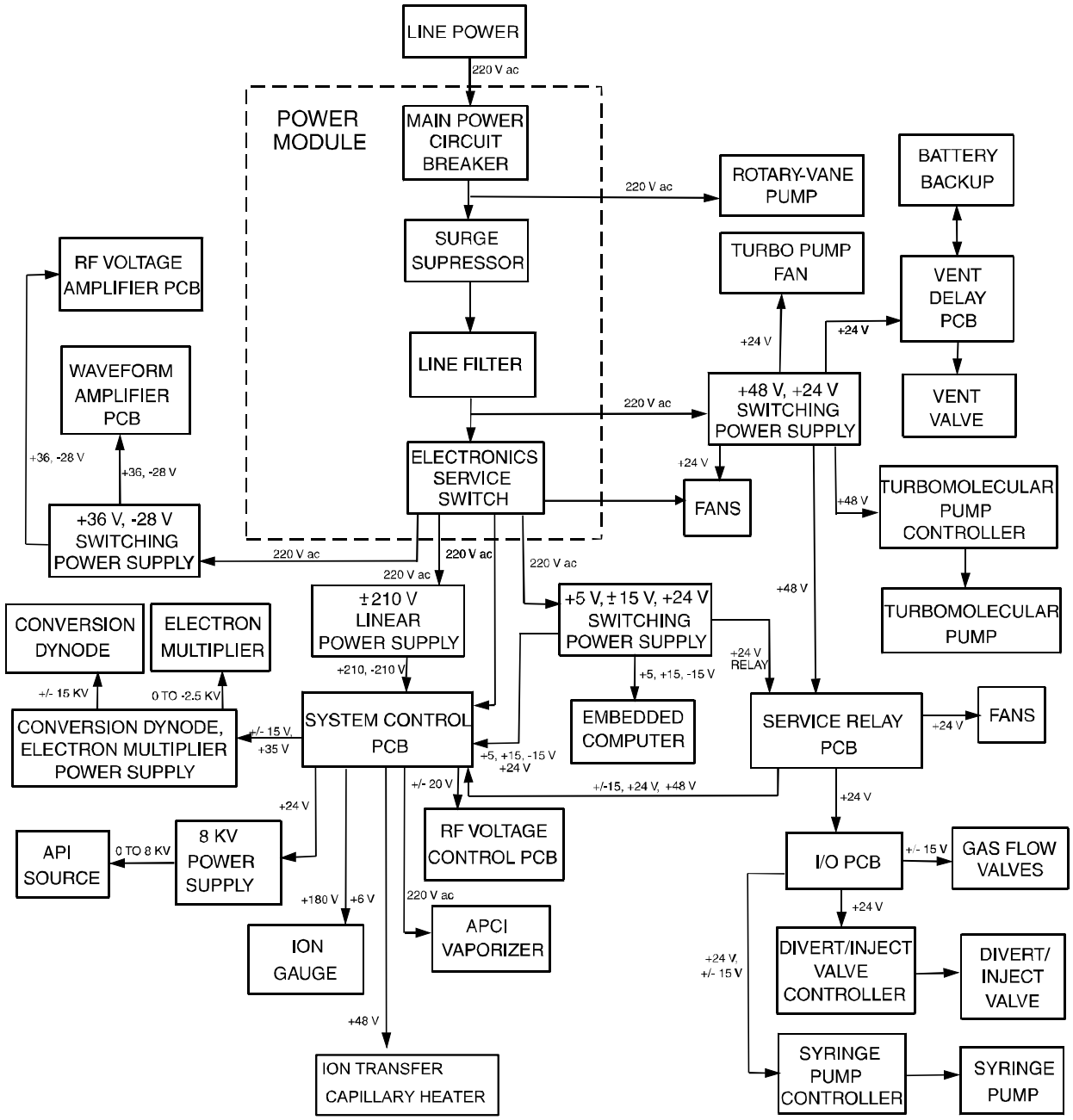

Figure 2-18. Functional block diagram of the Power Module and power distribution of the MS detector

System Control PCB

The ***System Control PCB*** is the principal PCB for controlling and monitoring the operation of the MS detector. The System Control PCB is the large board that is located on the right side of the MS detector. The many interconnections of the System Control PCB with other components of the MS detector can be seen in Figure 2-19 through Figure 2-23.

The System Control PCB contains the following components:

- Power supply regulation circuits
- Dc voltage control circuitry
- Divert/inject valve control circuit
- API source control circuit
- Electron multiplier control circuit
- Conversion dynode control circuit
- Ion transfer capillary heater/sensor control circuit
- APCI vaporizer heater/sensor control circuit/safety interlock relay
- Ion gauge control circuit
- Convectron® gauge control circuit
- Vacuum protection circuitry
- RF voltage control circuitry
- Temperature monitoring circuitry
- Diagnostic circuitry
- Interface with the embedded computer

The ***±150 V dc power supply*** provides power for the dc voltages that are applied to the ion transfer capillary heater, octapoles, and mass analyzer electrodes.

The ***±210 V dc linear power supply*** (for LCQ Advantage MAX) or the ***AC toroidal transformer*** (for LCQ Deca XP MAX) provides power for the dc voltage that is applied to the tube lens.

The ***±24 V*** (for LCQ Advantage MAX) or ***±20 V*** (for LCQ Deca XP) ***dc power supply*** provides power for the RF detector in the RF Voltage Control PCB.

The ***+180 V dc power supply*** provides power for the ion gauge grid.

The ***dc voltage control circuitry*** controls and monitors the dc voltages that are applied to the ion transfer capillary heater, tube lens, octapoles, interoctapole lens, and mass analyzer electrodes.

The ***divert/inject valve control circuit*** controls and monitors the divert/inject valve.

The ***API source control circuit*** controls and monitors the high voltage that is applied to the ESI needle, the APCI corona discharge needle, and the NSI capillary.

The ***electron multiplier control circuit*** sends a signal to the electron multiplier power supply that is proportional to the voltage to be applied to the electron multiplier cathode. It also reads back a signal that is proportional to the actual voltage applied to the electron multiplier cathode. The electron multiplier control circuit lowers the electron multiplier voltage when mass analysis is not occurring.

The ***conversion dynode control circuit*** controls and monitors the polarity of the 15 kV potential that is applied to the conversion dynode.

The ***ion transfer capillary heater/sensor control circuit*** monitors the temperature of the ion transfer capillary via a platinum probe temperature sensor. It also provides the voltage needed by the ion transfer capillary heater.

The ***APCI vaporizer heater/sensor control circuit*** controls the temperature of the APCI vaporizer via a thermocouple sensor. It also provides 230 V ac line voltage to the heater in the APCI vaporizer.

The ***ion gauge control circuit*** controls the ion gauge and reads back the pressure signal. (The ion gauge measures the pressure in the analyzer region of the vacuum manifold.)

The ***Convectron gauge control circuit*** controls the Convectron gauge and reads back the pressure signal. (The Convectron gauge measures the pressure in the foreline and the ion transfer capillary-skimmer region of the vacuum manifold.)

The ***vacuum protection circuitry*** monitors the pressure in the foreline (between the turbomolecular pump and the forepump), as measured by the Convectron gauge, and in the analyzer region of the vacuum manifold, as measured by the ion gauge. Refer to the topic **Vacuum System Electronic Assemblies** on page 2-38 for more information on vacuum protection.

The ***RF voltage control circuitry*** controls and monitors the RF Voltage Amplifier PCB, Waveform Amplifier PCB, and RF Voltage Control PCB.

The ***switching power supply outputs*** distribute +5 V, ±15 V, and ±24 V dc power to various PCBs and modules of the MS detector.

The ***temperature monitoring circuitry*** monitors the temperatures at the RF Voltage Control PCB, Top Cover PCB, RF Voltage Amplifier PCB, and System Control PCB.

The ***diagnostic circuitry*** monitors the outputs of various components and circuits on the LCQ Advantage MAX. Information on voltages, currents, temperatures, flow rates, logic, etc. is sent to the data system, where it can be accessed via the Tune Status view and the diagnostics program.

The ***embedded computer interface*** is a high speed serial line that connects the System Control PCB with the Control DSP (digital signal processor) PCB in the embedded computer. The System Control PCB communicates with the data system computer via the embedded computer.

Vacuum System Electronic Assemblies

The ***vacuum system electronic assemblies*** control and monitor the vacuum system of the MS detector. The vacuum system electronic assemblies include the following:

- Vacuum protection circuitry
- Turbomolecular Pump Controller
- Vent Delay PCB
- Battery backup
- +48, +24 V dc switching power supply

A functional block diagram of the LCQ Advantage MAX vacuum system electronic assemblies is shown in Figure 2-19. That for the LCQ Deca XP MAX is shown in Figure 2-20.

The ***vacuum protection circuitry*** on the System Control PCB monitors the pressure in the ion transfer capillary-skimmer region of the vacuum manifold, as measured by the Convectron gauge, and in the analyzer region of the vacuum manifold, as measured by the ion gauge. The vacuum protection circuitry turns off power to the octapole and mass analyzer RF and waveform generation circuitry, 8 kV power supply (for the API source), electron multiplier and conversion dynode power supply, APCI vaporizer heater, and dc voltages to the ion transfer capillary heater, tube lens, octapoles, interoctapole lens, and mass analyzer if one or more of the following conditions arise:

- The pressure in the ion transfer capillary-skimmer region is above 3 Torr
- The pressure in the analyzer region is above 5×10^{-4} Torr
- The high-voltage safety interlock switch on the API source is open (that is, the API flange is not secured to the spray shield)

The LED labeled *Vacuum* on the front panel of the LCQ Series MS detector is illuminated green whenever the vacuum protection circuitry indicates that the vacuum is OK (and the safety interlock switch on the API source is closed).

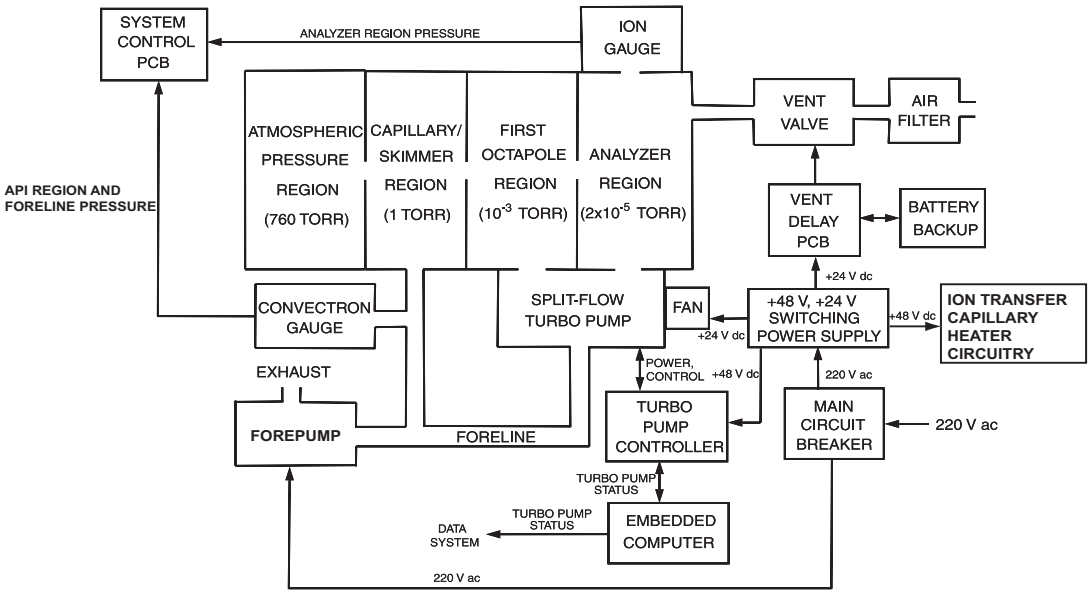

Figure 2-19. Functional block diagram of the LCQ Advantage MAX vacuum system electronic assemblies

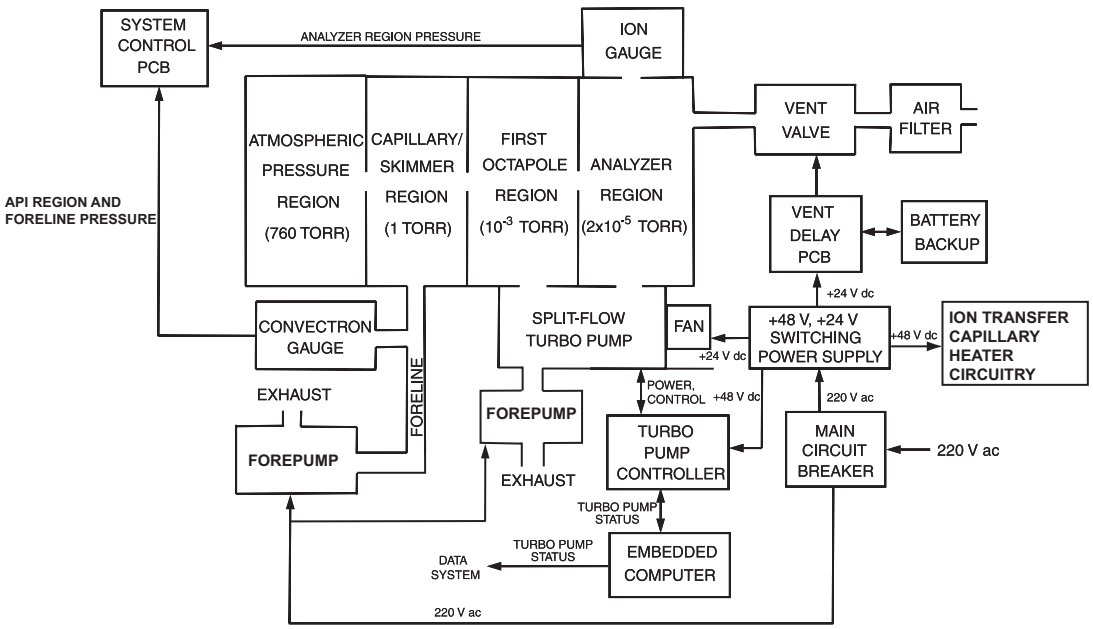

Figure 2-20. Functional block diagram of the LCQ Deca XP MAX vacuum system electronic assemblies

The Pfeiffer TC600 ***Turbomolecular Pump Controller*** provides power to and control of the turbomolecular pump. The turbomolecular pump status (temperature, rotational speed, etc.) is sent from the Turbomolecular Pump Controller to the embedded computer over a serial line. Power for the Turbomolecular Pump Controller and the turbomolecular pump is turned off and on by the main power circuit breaker and not by the electronics service switch.

The ***Vent Delay PCB*** controls the vent valve. The vent valve is closed when the solenoid is energized. The vacuum manifold is vented to filtered air 30 s after power is removed from the system.

The ***+48, +24 V dc switching power supply*** provides power to the ion transfer capillary heater, Turbomolecular Pump Controller, Vent Delay PCB, and vent valve during normal operating conditions. A ***battery backup*** on the Vent Delay PCB provides power to the Vent Delay PCB and vent valve during a power failure. If external power is not restored to the instrument after 30 s, a circuit on the Vent Delay PCB times out, and power to the vent valve solenoid is shut off. When power to the vent valve solenoid is shut off, the vent valve opens and the manifold is vented to filtered air. The vent valve closes after power is restored to the system. The battery backup is recharged automatically by the system after power is restored.

RF/Waveform Voltage Generation Electronic Assemblies

The ***RF/waveform voltage generation electronic assemblies*** produce the ring electrode RF voltage and the octapole RF voltage. They also produce the ion isolation waveform voltage, resonance excitation RF voltage, and resonance ejection RF voltage that are applied to the endcap electrodes of the mass analyzer. All RF and waveform voltages are controlled by the System Control PCB.

The RF/waveform voltage generation electronic assemblies include the following components. See Figure 2-21.

- Waveform DDS PCB
- Waveform Amplifier PCB
- RF Voltage Amplifier PCB
- Low Pass Filter PCB
- Dc ring filter
- RF voltage coil
- RF Voltage Control PCB
- Top Cover PCB
- Switched Balun PCB (LCQ Advantage MAX only)

- Auxiliary Amplifier PCB (LCQ Deca XP MAX only)

The ***Waveform DDS (direct digital synthesizer) PCB***, which is a part of the embedded computer, provides the reference voltages for the resonance excitation RF voltage, resonance ejection RF voltage, ion isolation waveform voltage, and the octapole RF voltage These voltages are sent to the Waveform Amplifier PCB. It also provides the reference voltage for the ring electrode RF voltage, which is sent to the RF Voltage Amplifier PCB.

The ***Waveform Amplifier PCB*** receives and amplifies the ion isolation waveform produced by the Waveform DDS PCB. The Waveform Amplifier PCB also receives a sine wave reference signal from the Waveform DDS PCB that it uses to produce the resonance excitation, resonance ejection, and octapole RF voltages.

The ***RF Voltage Amplifier PCB*** provides the ring electrode RF primary voltage for the RF voltage coil. The RF Voltage Amplifier PCB receives a sine wave reference signal from the Waveform DDS PCB.

The ***Low Pass Filter PCB*** removes second and third harmonics from the ring electrode RF voltage.

The ***dc ring filter*** filters the dc offset voltage that is applied to the ring electrode.

The ***RF voltage coil*** amplifies the primary voltage from the RF Voltage Amplifier PCB to produce a secondary voltage of 0 to 8500 V ac (peak) that is supplied to the ring electrode of the mass analyzer. Also, the dc offset voltage that is applied to the ring electrode is added to the ring electrode RF voltage at the RF voltage coil.

The ***RF Voltage Control PCB*** detects and controls the amplitude of the RF voltage that is applied to the ring electrode. The RF Voltage Control PCB includes the mass control circuit, and it resides in a thermally stable housing, which helps to prevent mass calibration drift.

The ***Switched Balun PCB*** (in LCQ Advantage MAX) or the ***Auxiliary Amplifier PCB*** (in LCQ Deca XP MAX) receives the amplified octapole RF voltage from the Waveform DDS PCB, which is applied to the octapoles via the Top Cover PCB. The Switched Balun PCB also receives the amplified waveform voltages, resonance excitation RF voltage, and resonance ejection RF voltage from the Waveform Amplifier PCB. The Switched Balun PCB splits the waveform voltages, resonance excitation RF voltage, and resonance ejection RF voltage into two RF voltages that are 180° out of phase (one for each of the endcap electrodes of the mass analyzer). The endcap electrode dc offset voltage from the System Control PCB is then added to the waveform voltages, resonance excitation RF voltage, and resonance ejection RF voltage.

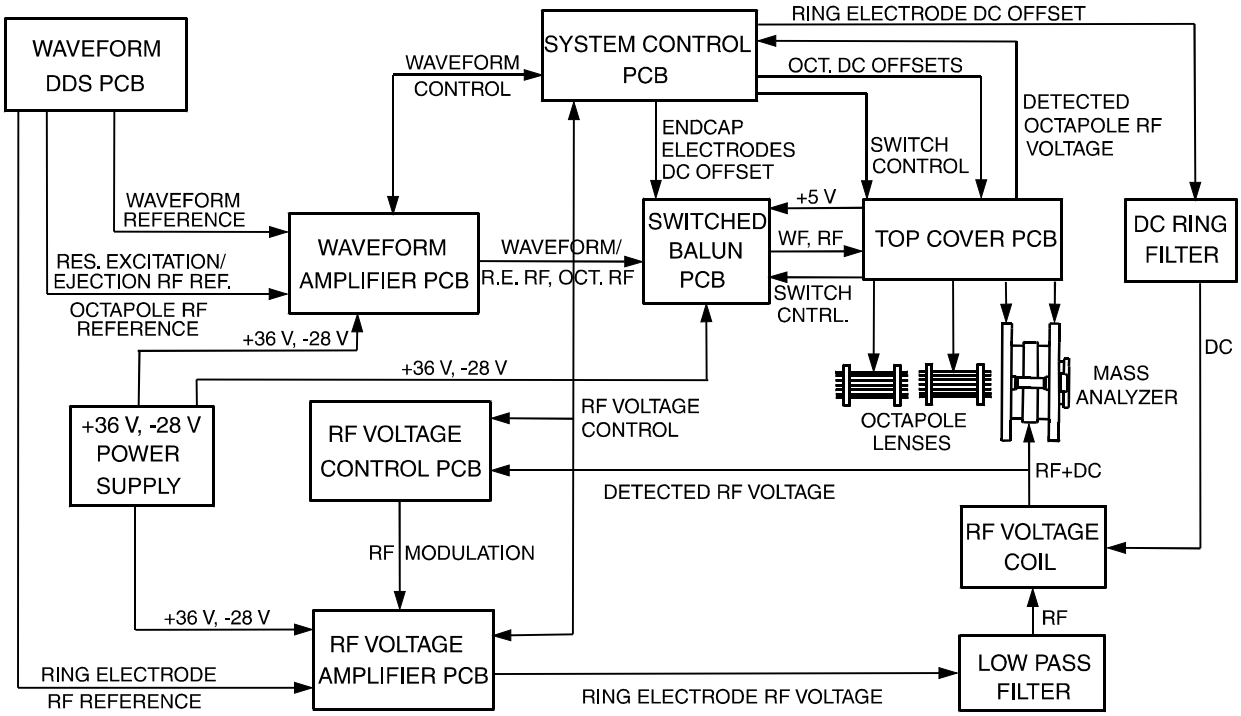

Figure 2-21. RF/waveform voltage generation electronic assemblies

The ***Top Cover PCB*** serves as the interface between the MS detector electronics and the ion optics, mass analyzer, and electron multiplier anode. (It is located on the top of the vacuum manifold top cover plate.) The Top Cover PCB receives the waveform voltage, resonance excitation RF voltage, and resonance ejection RF voltage (plus dc offset voltage), and then passes them to the endcap electrodes of the mass analyzer. The Top Cover PCB also receives the octapole RF voltage from the Switched Balun PCB. A ***trifilar coil*** on the Top Cover PCB splits the octapole RF voltage into two RF voltages that are 180° out of phase. (The two RF voltages are applied to alternate rods.) Two dc offset voltages for the split octapole and one dc offset voltage for the second octapole are added to the RF voltages at the trifilar coil.

Ion Detection System Electronic Assemblies

The ***ion detection system electronic assemblies*** provide high voltage to the electron multiplier and conversion dynode of the ion detection system. They also receive the electron multiplier output current signal, convert it to a voltage (by the electrometer circuit), and pass it to the data system. A functional block diagram of the ion detection system electronic assemblies is shown in Figure 2-22.

The ion detection system electronic assemblies include the following:

- Electron multiplier power supply
- Conversion dynode power supply
- Electrometer circuit

The ***electron multiplier power supply*** supplies the -0.8 kV to -2.5 kV dc high voltage to the cathode of the electron multiplier. The high voltage set control signal for the electron multiplier power supply comes from the System Control PCB. This signal controls a feedback control circuit and is proportional to the final high voltage to be applied to the electron multiplier cathode. The electron multiplier voltage is lowered by the System Control PCB during sample ionization to prolong the life of the electron multiplier.

The ***conversion dynode power supply*** supplies +15 kV and -15 kV dc high voltage to the conversion dynode. The polarity of the voltage applied to the conversion dynode is determined by a control signal from the System Control PCB.

The ***electrometer circuit***, located in a shielded enclosure on the Top Cover PCB, receives the amplified ion current from the anode of the electron multiplier, converts the current into a voltage, and then integrates the voltage over time. The integrated voltage is then passed to the Acquisition DSP PCB (in the embedded computer) where it is processed and sent to the data system.

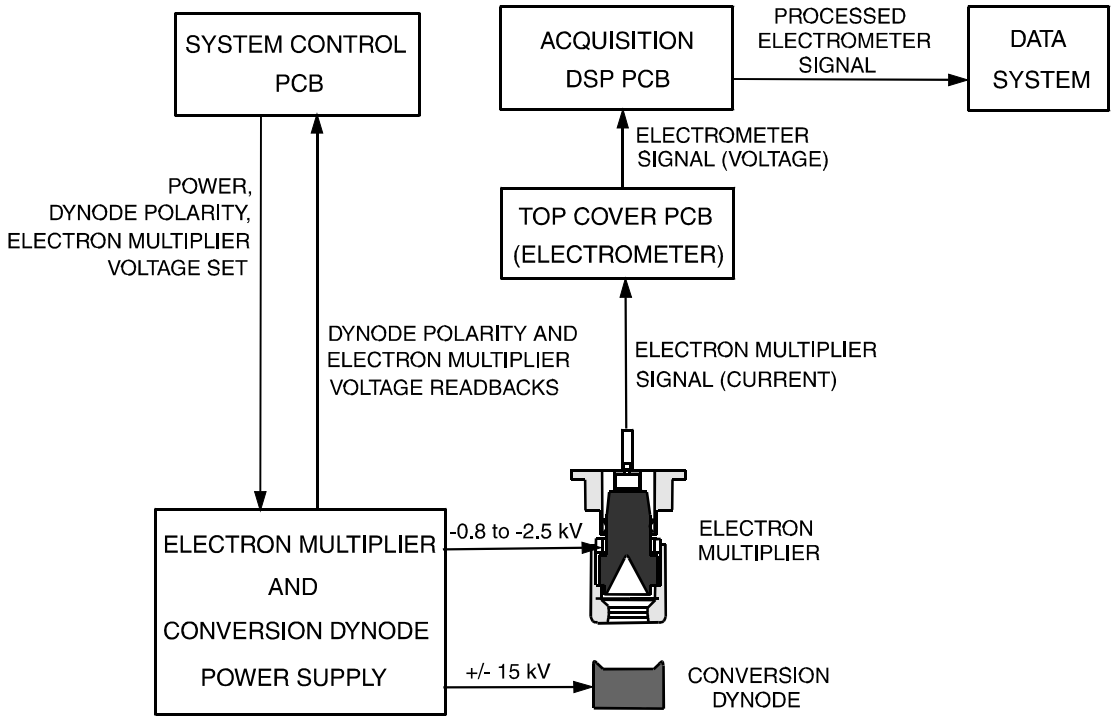

Figure 2-22. Functional block diagram of the ion detection system electronic assemblies

Embedded Computer Electronic Assemblies

The ***embedded computer*** is a computer within the MS detector that coordinates instrument control, waveform and RF voltage generation, data acquisition, and communication with the data system and external devices. A functional block diagram of the embedded computer is shown in Figure 2-23. The embedded computer contains the following components:

- ATX mainboard (LCQ Advantage MAX only)
- ISA Single Port Computer (LCQ Deca XP MAX only)
- RS 232 to 485 Converter PCB (LCQ Advantage MAX only)
- RJ-45 Serial Connector (LCQ Deca XP MAX only)
- Waveform DDS PCB
- Control DSP PCB
- Acquisition DSP PCB
- Support PCB (LCQ Advantage MAX only)
- Ethernet PCB

The ***ATX mainboard*** distributes power to and communication between the Ethernet PCB, Support PCB, Acquisition DSP PCB, Control DSP PCB, and Waveform DDS PCB. The ATX mainboard includes a CPU, RAM memory, ISA bus, and PCI bus. Software to run the embedded computer is loaded into the RAM memory on bootup.

The ***Waveform DDS (direct digital synthesizer) PCB*** provides the reference sine wave or ac voltages for the resonance excitation RF voltage, resonance ejection RF voltage, ion isolation waveform voltage, and octapole RF voltage. These voltages are sent to the Waveform Amplifier PCB in the MS detector. It also provides the reference voltage for the ring electrode RF voltage, which is sent to the RF Voltage Amplifier PCB.

Three coaxial cables transmit the ring electrode RF reference voltage, resonance excitation/ejection RF reference voltage, ion isolation waveform reference voltage, and octapole RF reference voltage from the Waveform DDS PCB to the RF Voltage Amplifier PCB and Waveform Amplifier PCB. The Waveform DDS PCB, Control DSP PCB, and Acquisition DSP PCB communicate with each other over a ***local bus***.

The ***Control DSP (digital signal processor) PCB*** controls the MS detector via the System Control PCB. A ***high speed serial line*** serves as an interface between the Control DSP PCB and the System Control PCB. The Control DSP PCB is where most computations and control functions take place. For example, it determines what waveforms the Waveform DDS PCB produces and when to apply them.

The ***Acquisition DSP PCB*** serves as the digital acquisition link with the electrometer on the Top Cover PCB. It receives data from the electrometer, processes it, and sends it to the data system via the Ethernet local area network connection.

The ***Support PCB*** provides power for the embedded computer. Software to run the embedded computer, which is contained in flash memory on the Support PCB, is loaded into RAM on bootup. After bootup, software to run the LCQ Series MS detector is transferred from the data system to the embedded computer over an Ethernet. You can reboot the embedded computer and download the LCQ Series MS detector software from the data system by pressing the reset button on the power panel.

The ***Ethernet PCB*** provides Ethernet communication between the embedded computer and the data system over a thinwire Ethernet cable.

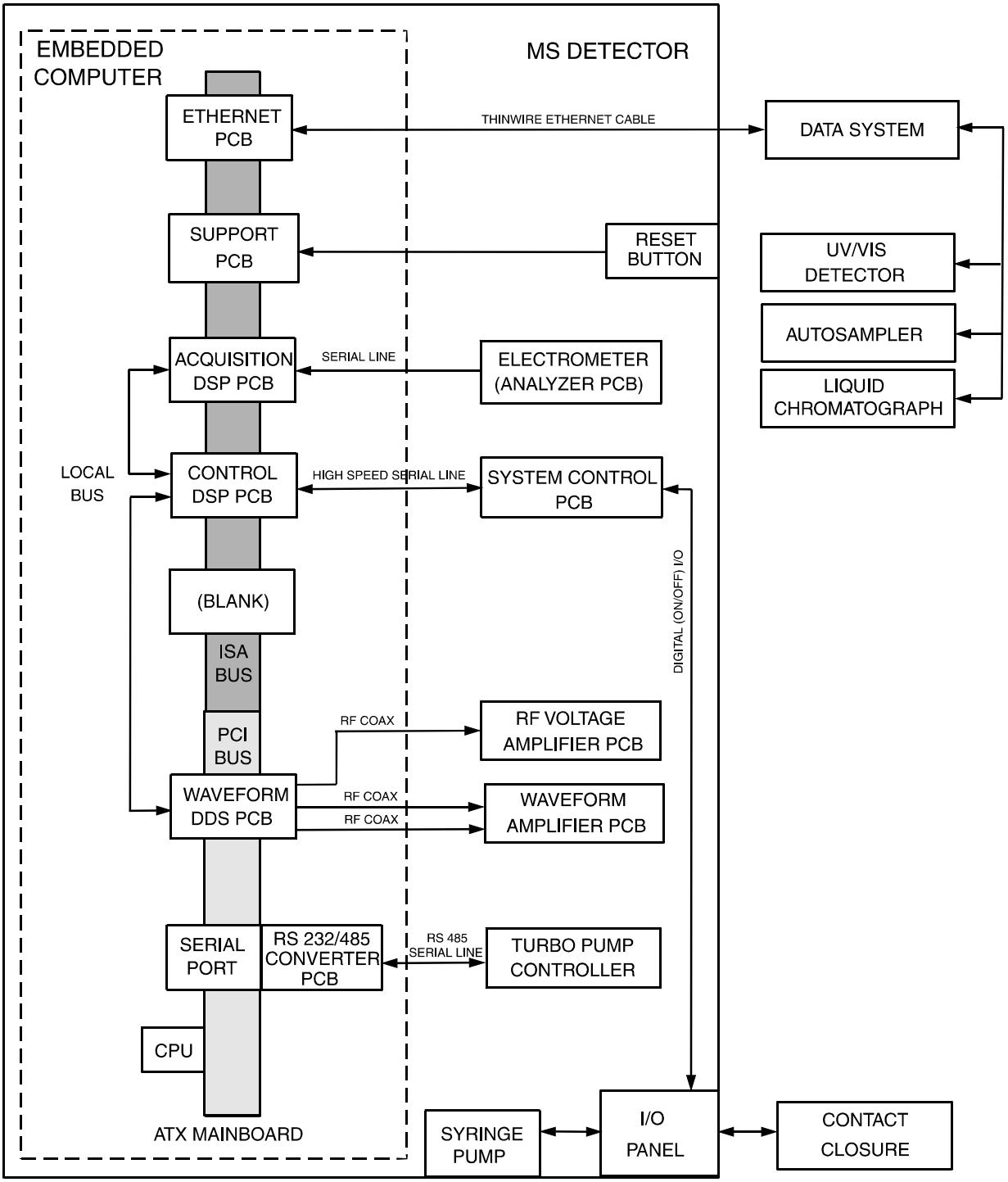

Figure 2-23. Functional block diagram of the embedded computer, showing communication with the MS detector and external devices

2.6 Data System

The ***data system*** controls and monitors the LCQ Series MS detector system. The data system also processes data that is acquired by the LCQ Series MS detector system. The data system is composed of the following:

- Computer hardware and software
- Data system/MS detector interface
- Data system/local area network interface
- Printer (optional)

Computer Hardware and Software

To run Xcalibur 1.3 with the LCQ Series MS detector, the data system computer must have the following minimum system requirements:

- Pentium III 500 MHz with 128 MB RAM
- CD-ROM drive
- Video card and monitor capable of 1024 x 728 resolution and 65,536 colors
- >4 GB hard drive
- Microsoft® Windows® 2000 with Service Pack 2
- Microsoft Office XP
- Primary Ethernet adapter (data system to MS detector)
- Secondary Ethernet adapter (data system to local area network)
- 1.44-MB, 3.5-in. diskette drive
- Keyboard and mouse

Note. Depending upon the applications for which your LCQ Series MS detector is used, your data processing and connectivity requirements may differ from those listed here.

Data System / MS Detector Interface

The data system computer contains an Ethernet adapter (called the primary Ethernet adapter) that is dedicated to data system/MS detector communications. The Ethernet adapter on the instrument resides in the embedded computer box. A thinwire Ethernet cable connects the primary Ethernet adapter of the data system with the Ethernet connector on the power panel of the MS detector (see Figure 2-6).

Data System / Local Area Network Interface

The data system computer contains a second Ethernet adapter called the secondary Ethernet adapter. The secondary Ethernet adapter is not involved in data system/MS detector communications. You can use the secondary Ethernet adapter to connect your LCQ Series PC to a local area network.

Printer

A high resolution laser printer is available with the LCQ Series MS detector as an option. The printer communicates with the PC via a parallel port (LPT1). Refer to the manual supplied by the manufacturer for details about the printer.

You set up the printer from the Print Setup dialog box. To open the Print Setup dialog box, choose **File > Print Setup** in any window.

Chapter 3
Preparing for Daily Operation

This chapter outlines the checks of the LCQ Series MS detector system that should be performed every day before you begin your first analysis. The following checks should be performed every day:

- Check disk space on the data system
- Check helium and nitrogen gas pressures
- Check system vacuum levels
- Print a hard copy of the Tune Plus Status view

Note. You do not need to calibrate or tune the LCQ Series MS detector as part of your daily routine.

Calibration parameters are instrument parameters whose values do not vary with the type of experiment. You need to calibrate the LCQ Series MS detector perhaps once a month, and check the calibration once a week. Refer to **Finnigan LCQ Series Getting Started** for a procedure for calibrating the LCQ Series MS detector.

Tune parameters are instrument parameters whose values vary with the type of experiment. You need to tune the LCQ Series MS detector (or change the Tune Method) whenever you change the type of experiment. Refer to **Finnigan LCQ Series Getting Started** for procedures for tuning the LCQ Series MS detector in the ESI or APCI mode. (Note that the LCQ Series MS detector comes with several standard Tune Methods specific for various experimental conditions, so that tuning is often not required for many types of experiments.)

Refer to **Finnigan LCQ Series Nanospray Ion Source Operator's Manual** for information concerning the NSI technique.

3.1 Checking the Disk Space

You should verify on a regular basis that your hard disk drive has enough free space for data acquisition. The amount of available disk space is shown in the Check Disk Space dialog box. To determine the amount of available disk space, proceed as follows:

1. From the Home Page window (which is available by choosing **Start > Programs > Xcalibur > Xcalibur**), choose **Actions > Check Disk Space** to open the Disk Space dialog box. The Disk Space dialog box lists the following:
   - Current drive and directory (for example, *C:\Xcalibur\system\programs)*
   - Number of MB that are available (free) on the current drive
   - Percentage of the current drive that is available
   - Total capacity of the current drive
2. To select another disk drive so that you can determine its disk space, click on the Directory button.
3. When you have completed this procedure, click on **OK** to close the dialog box.

If necessary, you can free space on the hard disk by deleting obsolete files and by moving files from the hard disk drive to a backup medium. First, copy files to the backup medium. After you have copied the files, you can delete them from the hard disk. Use the Microsoft Windows Explorer or File Manager copy (or backup) and delete commands to copy (or backup) and delete files. Refer to the Microsoft Windows 2000 users manual for information on the Explorer or File Manager.

3.2 Checking the Helium and Nitrogen Supplies

Check the helium supply on the regulator of the gas tank. Make sure that you have sufficient gas for your analysis. If necessary, install a new tank of helium. Verify that the pressure of helium reaching the MS detector is between 200 and 350 kPa (30 to 50 psig). If necessary, adjust the pressure with the tank pressure regulator.

Check the nitrogen supply on the regulator of the nitrogen gas tank or liquid nitrogen boil-off tank. Make sure that you have sufficient gas for your analysis. Typical nitrogen consumption is 100 cubic feet per day (nitrogen on 24 hours per day). If necessary, replace the tank. Verify that the pressure of nitrogen reaching the MS detector is between 550 and 830 kPa (80 to 120 psig). If necessary, adjust the pressure with the tank pressure regulator.

CAUTION. Before you begin normal operation each day, ensure that you have sufficient nitrogen for your API source. If you run out of nitrogen, the LCQ Series MS detector automatically turns the MS detector Off to prevent the possibility of atmospheric oxygen from entering the ion source. The presence of oxygen in the ion source when the MS detector is On could be unsafe. (In addition, if the LCQ Series MS detector turns off the MS detector during an analytical run, you could lose data.)

3.3 Checking the System Vacuum Levels

For proper performance, your LCQ Series system must operate at the proper vacuum levels. Operation of the system at vacuum levels that are too high can cause reduced sensitivity, tuning problems, and reduced lifetime of the electron multiplier. You should check your system for air leaks by checking the system vacuum levels before you begin your first acquisition.

> **Caution.** Major air leaks are often identifiable merely by listening for a rush of air or a hissing sound somewhere on the instrument. A major leak might be caused, for example, by an extremely loose or disconnected fitting, by an O-ring that is not properly seated, or by an open valve. **If you hear these sounds, do not turn on the high voltages to the MS detector.**

Air leaks are indicated by the following:

- Vacuum manifold pressure above 5 x 10^{-4} Torr in the analyzer region (as measured by the ion gauge) or above 3 Torr in the capillary-skimmer region (as measured by the Convectron gauge). If either pressure is too high, the LED labeled *Vacuum* is not illuminated green. [Note that the safety interlock switch on the API source must be depressed (that is, the API flange must be secured to the spray shield) for the Vacuum LED to be illuminated green.]
- Vacuum manifold pressure levels as measured by the Convectron gauge and ion gauge are higher than the levels shown in Table 3-1.

You can check the current values of the pressures in the vacuum manifold, as measured by the Convectron gauge and ion gauge, in the Tune Plus window. In the Tune Plus window the pressures are listed in the Vacuum dialog box. To display the Vacuum dialog box, click on the vacuum button or choose **Setup > Vacuum**.

Compare the current values of the pressures in the vacuum manifold with the values listed in Table 3-1 and with values from Status views that you previously printed out. If the current values are higher than normal, you may have an air leak.

If the pressure is high (above 5 x 10^{-5} Torr in the analyzer region), and you have restarted the system within the last 30 to 60 min, wait an additional 30 min and recheck the pressure. If the pressure is decreasing with time, check the pressure periodically until it is low enough for the proper operation of the MS detector.

Table 3-1. Typical Pressure Readings

Conditions	Convectron gauge reading (foreline, ion transfer capillary- skimmer region)	Ion gauge reading (analyzer region)
Helium on, ion transfer capillary open (200 °C)	0.9 to 1.1 Torr	1.0×10^{-5} to 1.5×10^{-5} Torr
Helium on, ion transfer capillary open (25 °C)	1.2 Torr (or slightly higher)	$<2.0 \times 10^{-5}$ Torr
Helium on, ion transfer capillary closed	2×10^{-3} to 1×10^{-2} Torr	8×10^{-6} Torr
Helium off, ion transfer capillary open (200 °C)	0.9 to 1.1 Torr	3×10^{-6} Torr
Helium off, ion transfer capillary open (25 °C)	1.2 Torr (or slightly higher)	4×10^{-6} Torr
Helium off, ion transfer capillary closed	2×10^{-3} to 5×10^{-3} Torr	2.0×10^{-6} Torr

If the pressure remains high, your system may have an air leak. Check each fitting and flange on the system for tightness, and tighten the fittings or flanges that are loose. Do not tighten fittings indiscriminately. Pay particular attention to fittings that have been changed recently or to fittings that have been subjected to heating and cooling. Make sure that the top cover plate of the vacuum manifold and the spray shield of the API source are properly seated.

3.4 Printing a Hard Copy of the Status View

The Tune Plus Status view lists the current values of the instrument parameters. It is a good idea to print (or save in a file) a hard copy of the status view on a daily basis. This procedure allows you to detect problems by monitoring changes in the instrument parameters.

To print a copy of the Status view, proceed as follows:

1. From the Tune Plus window, choose **Control > On** (or click on the On/Standby button) to turn on voltages to the API source, ion optics, mass analyzer, and ion detection system.
2. Choose **View > Display Status View** (or click on the Display Status View button on the button bar). The Status view appears in the Tune Plus window.
3. Click on the Status view to make it the active window.
4. Print a hard copy of the Status view by choosing **File > Print**.
5. Choose **Control > Standby** to turn off voltages to the API source, ion optics, mass analyzer, and ion detection system.

Chapter 4
LCQ Advantage MAX MS Detector Maintenance

LCQ Advantage MAX performance depends on the maintenance of all parts of the instrument. **It is your responsibility to maintain your system properly by performing the system maintenance procedures on a regular basis**.

This chapter describes routine MS detector maintenance procedures that must be performed to ensure optimum performance of the instrument. Most of the procedures involve cleaning. For example, procedures are provided for cleaning the API source, ion optics, mass analyzer, and ion detection system. Procedures are also presented for replacing the API sample tube, ion transfer capillary, and electron multiplier.

Routine and infrequent MS detector maintenance procedures are listed in Table 4-1.

Table 4-1. MS Detector maintenance procedures

MS Detector Component	Procedure	Frequency	Procedure Location
API source	Flush (clean) sample transfer line, sample tube, and API probe	Daily	page 4-6
API source	Flush (clean) ion transfer capillary	Daily (or as needed*)	page 4-8
API source	Flush (clean) spray shield/spray cone	Daily	page 4-8
Forepump	Purge (decontaminate) oil	Daily (or as needed*)	page 4-45
API source	Clear ion transfer capillary	If ion transfer capillary bore is obstructed	page 4-10
API source	Replace ion transfer capillary	If ion transfer capillary bore is corroded.	page 4-11
API source	Clean API stack (spray shield, ion transfer capillary, tube lens, and skimmer)	As needed*	page 4-17

Table 4-1. MS Detector maintenance procedures, continued

MS Detector Component	Procedure	Frequency	Procedure Location
API source	Replace sample tube	If sample tube is broken or obstructed	Refer to the **Finnigan Ion Max API Source Hardware Manual**.
Ion optics	Clean octapoles and interoctapole lens	As needed*	page 4-21
Mass analyzer	Clean mass analyzer	Yearly (or as needed*)	page 4-21
Ion detection system	Clean ion detection system (electron multiplier and conversion dynode)	Whenever the top cover plate of the vacuum manifold is removed	page 4-31
Ion detection system	Replace electron multiplier anode and cathode	If noise in spectrum is excessive or proper electron multiplier gain can not be achieved	page 4-40
Turbomolecular pump	Change oil reservoir	At least once a year	page 4-46
Turbomolecular pump	Replace turbomolecular pump	If turbomolecular pump fails	page 4-46
Cooling fans	Clean fan filter	Every 4 months	page 4-49
Forepump	Add oil	If oil level is low	Manufacturer's documentation
Forepump	Change oil	Every 3 months or if oil is cloudy or discolored	Manufacturer's documentation
Fuses	Replace fuse	If fuse has blown	**LCQ Advantage MAX Diagnostics and PCB and Assembly Replacement** chapter
Electronic modules	Replace electronic module	If electronic module fails	**LCQ Advantage MAX Diagnostics and PCB and Assembly Replacement** chapter
PCBs	Replace PCB	If PCB fails	**LCQ Advantage MAX Diagnostics and PCB and Assembly Replacement** chapter
Ion gauge	Replace ion gauge	If ion gauge fails	**LCQ Advantage MAX Diagnostics and PCB and Assembly Replacement** chapter

*Frequency depends on analytical conditions

For instructions on maintaining LCs or autosamplers, refer to the manual that comes with the LC or autosampler.

This chapter contains the following sections:

- Tools and supplies
- Frequency of cleaning
- API source maintenance
- Cleaning the ion optics and mass analyzer
- Replacing the electron multiplier
- Purging the forepump oil
- Replacing the turbomolecular pump oil reservoir
- Cleaning the fan filter

Note. The keys to success with the procedures in this chapter are:

Proceed methodically

Always wear clean, lint-free gloves when handling the components of the API source, ion optics, mass analyzer, and ion detection system

Always place the components on a clean, lint-free surface

Always cover the opening in the top of the vacuum manifold with a large, lint-free tissue whenever you remove the top cover plate of the vacuum manifold

Never overtighten a screw or use excessive force

Never insert a test probe (for example, an oscilloscope probe) into the sockets of female cable connectors on PCBs

4.1 Tools and Supplies

The LCQ Advantage MAX requires very few tools for you to perform routine maintenance procedures. You can remove and disassemble many of the components by hand. The tools, equipment, and chemicals listed in Table 4-2 are needed for the maintenance of the API source, ion optics, mass analyzer, and ion detection system.

Table 4-2. Tools, equipment, and chemicals

Description	Part Number
Wrench, 5/16-in., hex socket (Allen)	
Wrench, 9/16-in., socket	
Wrench, 7/16-in., open end	
Wrench, 9/16-in., open end	
Wrench, 5/16-in., open end	
Wrench, 1/2-in., open end	
Wrench, 3/8-in., open end	
Screwdrivers, set, ball point, Allen (also referred to as ball drivers)	00025-03025
Screwdriver, slot head, large	
Screwdriver, slot head, small	
Screwdriver, Phillips, small	
Fused-silica cutting tool	
Hypodermic tube	00106-20000
Spray bottle	
Beaker, 450 mL	
Gloves, nylon	00301-09700
Kimwipes® or other lint-free industrial tissue	
Applicators (swabs), cotton-tipped	00301-02000
Detergent	
Clean, dry, compressed nitrogen gas	
Distilled water	
Methanol, HPLC grade or better	
Tool, ion transfer capillary	70111-20258

CAUTION. As with all chemicals, solvents and reagents should be stored and handled according to standard safety procedures and should be disposed of according to local and federal regulations.

4.2 Frequency of Cleaning

The frequency of cleaning the components of the MS detector depends on the types and amounts of samples and solvents that are introduced into the instrument. In general, for a given sample and ionization technique, the closer an MS detector component is to the source of the ions, the more rapidly it becomes dirty.

- The sample tube, API probe, ion transfer capillary bore, and spray shield of the API source (including the ion sweep cone and the spray cone) should be cleaned at the end of each operating day to remove any residual salts from buffered mobile phases or other contamination that might have accumulated during normal operation. Refer to the topics **Flushing the Sample Transfer Line, Sample Tube, and API Probe** and **Flushing the Spray Shield, Ion sweep cone, Spray Cone, and Ion Transfer Capillary** on page 4-6 and page 4-8, respectively.
- The tube lens and skimmer of the API source become dirty at a slower rate than the API probe, spray shield, and ion transfer capillary. Refer to the topic **Maintaining the API Stack** on page 4-11.
- The ion optics and the mass analyzer become dirty at a rate significantly slower than the API source. Refer to the topic **Cleaning the Ion Optics and Mass Analyzer** on page 4-28.
- Clean the electron multiplier and conversion dynode whenever you remove the top cover plate of the vacuum manifold by blowing them with a clean, dry gas. Refer to the topic **Cleaning the Ion Detection System** on page 4-31.

When the performance of your system decreases significantly due to contamination, clean the components of the MS detector in the following order:

- Clean the API probe, spray shield, and ion transfer capillary
- Clean the tube lens and skimmer
- Clean the ion optics and mass analyzer

4.3 API Source Maintenance

The API source requires a minimum of maintenance. Periodically, you need to clean the components of the API source to remove salts or other contaminants. The frequency of cleaning the API source depends on the types and amounts of samples and solvents that are introduced into the system.

Maintenance procedures are provided below to do the following:

- Flush the sample transfer line, sample tube, and API probe
- Flush the spray shield and the bore of the ion transfer capillary
- Clear a blocked ion transfer capillary
- Maintain the APCI probe assembly, including replacing the APCI sample tube
- Maintain the ESI probe assembly, including replacing the ESI sample tube
- Maintain the API stack, including replacing the ion transfer capillary

This manual provides maintenance procedures for the APCI probe and the ESI probe. For maintenance procedures for the NSI source, refer to the **LCQ Series Nanospray Ion Source Operator's Manual.**

CAUTION. AVOID EXPOSURE TO POTENTIALLY HARMFUL MATERIALS. Always wear protective gloves and safety glasses when you use solvents or corrosives. Also, contain waste streams and use proper ventilation. Refer to your supplier's Material Safety Data Sheets (MSDS) for procedures that describe how to handle a particular solvent.

Flushing the Sample Transfer Line, Sample Tube, and API Probe

You should flush the sample transfer line, sample tube, and API probe at the end of each working day (or more often if you suspect they are contaminated) by flowing a 50:50 methanol / distilled water solution from the LC through the API source.

To flush the sample transfer line, sample tube, and API probe, proceed as follows:

1. Make sure that the API flange is secured to the spray shield by the two flange retainer bolts.
2. Choose **Start > Programs > Xcalibur > LCQ Tune** to open the Tune Plus window.

3. From the Tune Plus window, choose **Control > On** (or click on the On/Standby button) to turn on the voltages and gas flows to the API source.
   - If you are operating in APCI mode, go to step 4.
   - If you are operating in ESI mode, go to step 5.
4. Set up the APCI source as follows:
   a. Ensure that the auxiliary gas line is connected to the A port on the APCI probe.
   b. In the Tune Plus window, choose **Setup > APCI Source** (or click on the APCI Source button). The APCI Source dialog box appears.
   c. In the APCI Source dialog box, use the Vaporizer Temp spin box to set the vaporizer temperature to 500 °C.
   d. Use the Sheath Gas Flow Rate spin box to set the sheath gas flow rate to 80 units.
   e. Use the Aux Flow Rate spin box to set the auxiliary gas flow rate to 10 units.
   f. Use the Discharge Current spin box to set the discharge current to 0 µA.
   g. Click on **OK** to set the APCI parameters and close the dialog box. Go to step 6.
5. Set up the ESI source as follows:
   a. Ensure that the auxiliary gas line is connected to the Aux port on the ESI probe.
   b. In the Tune Plus window, choose **Setup > ESI Source** (or click on the ESI Source button). The ESI Source dialog box appears.
   c. Use the Sheath Gas Flow Rate spin box to set the sheath gas flow rate to 80 units.
   d. Use the Aux Flow Rate spin box to set the auxiliary gas flow rate to 10 units.
   e. Use the Spray Voltage spin box to set the spray voltage to 0 kV.
   f. Click on **OK** to set the ESI parameters and close the dialog box.
6. Set up and start a flow of 50:50 methanol / water solution from the LC to the API source, as follows:
   a. In the Tune Plus window, choose **Setup > Direct Inlet Control** (or click on the LC pump button). The Inlet Direct Control dialog box appears.
   b. Select the LC tab.

c. In the Inlet Direct Control dialog box, set the Flow Rate to a value that is typical for your experiments.

d. In the Inlet Direct Control dialog box, set the % spin boxes to 50% methanol and water.

e. Click on **Start** to start the LC pump.

7. Let the solution flow through the sample transfer line, sample tube, and API probe for 15 min. After 15 min, turn off the flow of liquid from the LC to the API source, as follows. Leave the API source (including the APCI vaporizer, sheath gas, and auxiliary gas) on for an additional 5 min.

   a. In the Tune Plus window, click on the LC pump button. The Inlet Direct Control dialog box appears.

   b. Select the LC tab.

   c. Click on **Stop** to stop the LC pump.

8. After 5 min, turn off the API source by placing the MS detector in Standby: From the Tune Plus window, choose **Control > Standby** (or click on the On/Standby button).

Go on to the next topic: **Flushing the Spray Shield and the Ion Transfer Capillary**.

Flushing the Spray Shield, Ion Sweep Cone, Spray Cone, and Ion Transfer Capillary

You need to clean the spray shield, ion sweep cone, spray cone, and ion transfer capillary on a regular basis to prevent excessive contamination and to maintain optimum performance of your API source. A good practice is to flush the spray shield, ion sweep cone, spray cone, and ion transfer capillary at the end of each operating day after you flush the sample transfer line, sample tube, and API probe with a 50:50 methanol / water solution from the LC. (Refer to the topic **Flushing the Sample Transfer Line, Sample Tube, and API Probe** on page 4-6.) If you are operating the system with nonvolatile buffers in your solvent system or with high concentrations of sample, you might need to clean the spray shield, ion sweep cone, spray cone, and ion transfer capillary more often.

You do not need to vent the system to flush the spray shield, ion sweep cone, spray cone, and ion transfer capillary.

To clean the spray shield, ion sweep cone, spray cone, and the ion transfer capillary, do the following:

1. Turn off the flow of liquid from the LC (or other sample introduction device) to the API source. To turn off the flow of liquid from the LC to the API source, do the following:

a. Choose **Start > Programs > Xcalibur > LCQ Tune** to open the Tune Plus window.

b. In the Tune Plus window, choose **Setup > Direct Inlet Control** (or click on the LC pump button). The Inlet Direct Control dialog box appears.

c. Select the LC tab and click on **Stop** to stop the LC pump.

2. From the Tune Plus window, choose **Control > Standby** (or click on the On/Standby button) to put the MS detector in Standby. If you are using the APCI Source, click on the APCI Source button. Then, in the APCI Source dialog box, use the Vaporizer Temp spin box to set the vaporizer temperature to 0 °C. For either APCI or ESI, turn the heat to the ion transfer capillary heater off.

3. Loosen the two flange retainer bolts that secure the API flange (APCI or ESI flange) to the spray shield.

4. Pull back the API flange from the spray shield.

CAUTION. AVOID BURNS. At operating temperatures, the APCI vaporizer, ion sweep cone, spray cone, and ion transfer capillary can severely burn you! The APCI vaporizer typically operates at 400 to 600 °C and the ion sweep cone, spray cone, and ion transfer capillary typically operate at 100 to 300 °C. Allow the heated vaporizer, ion sweep cone, spray cone, and ion transfer capillary to cool to room temperature, for approximately 20 min, before you touch or remove these components.

5. Pull the ion sweep cone off of the spray cone, and place it on a large Kimwipe (or other lint-free tissue). Temporarily place another large Kimwipe on the bottom of the spray shield. (This Kimwipe is required to absorb the solution used to flush the spray cone, ion transfer capillary, and spray shield.)

6. Fill a spray bottle with a 50:50 solution of HPLC-grade methanol / distilled water. Spray approximately 5 mL of the solution at the opening of the ion transfer capillary. Do not touch the ion transfer capillary with the tip of the spray bottle.

7. Use the spray bottle filled with the 50:50 solution of HPLC-grade methanol / distilled water to flush contaminants from the accessible surfaces of the spray shield and the spray cone.

8. Remove the Kimwipe you used to absorb the solution. Swab the surface of the spray shield and spray cone with a dry Kimwipe.

9. Ensure that you have removed any salt or other contaminants that may have been deposited on the spray shield or spray cone.

10. If you are operating in the ESI mode, wipe off the ESI nozzle with a Kimwipe soaked with the 50:50 HPLC-grade methanol / water solution.

11. Use the spray bottle filled with the 50:50 solution of HPLC-grade methanol / distilled water to flush contaminants from the interior and exterior surface of the ion sweep cone. Then swab the surface of the ion sweep cone with a dry Kimwipe.

> **Note.** If you are finished operating your LCQ Advantage MAX for the day, cap the ion transfer capillary with the septum. Leave the API flange withdrawn from the spray shield. Purge the oil in the forepump as described in the topic **Purging the Oil in the Forepump** on page 4-45.

Clearing the Bore of the Ion Transfer Capillary

A stainless steel hypodermic tube has been included in your accessory kit for clearing the ion transfer capillary in the unlikely event it should become blocked. However, since the ion transfer capillary can be easily removed and replaced without loss of vacuum, and you might want to replace the ion transfer capillary instead of cleaning the ion transfer capillary.

If the pressure in the API region (as measured by the Convectron® gauge) drops considerably below 1 Torr, you should suspect a blocked ion transfer capillary. (You can check the Convectron gauge pressure in the Vacuum dialog box by choosing **Setup > Vacuum** from the Tune Plus window.)

You do not have to vent the system to clear the bore of the ion transfer capillary. To clear the bore of the ion transfer capillary, do the following:

1. Turn off the flow of liquid from the LC (or other sample introduction device) to the API source. To turn off the flow of liquid from the LC to the API source, do the following:
   a. Choose **Start > Programs > Xcalibur > LCQ Tune** to open the Tune Plus window.
   b. In the Tune Plus window, choose **Setup > Direct Inlet Control** (or click on the LC pump button). The Inlet Direct Control dialog box appears.
   c. Select the LC tab and click on **Stop** to stop the LC pump.
2. Loosen the two flange retainer bolts that secure the API flange (APCI or ESI) to the spray shield.
3. Pull back the API flange from the spray shield.

> **CAUTION.** The APCI vaporizer typically operates at 400 to 600 °C and the ion sweep cone, spray cone, and ion transfer capillary typically operate at 100 to 300 °C. Allow these components to come to ambient temperature before proceeding.

4. Clear the bore of the ion transfer capillary by inserting and withdrawing the 28 gauge, 10-in. hypodermic tube (P/N 00106-20000) included in your accessory kit.
5. Fill a spray bottle with a 50:50 solution of HPLC-grade methanol / distilled water. From a distance of 10 cm from the entrance end of the ion transfer capillary, spray a small amount of the solution down the bore of the ion transfer capillary.
6. Repeat steps 5 and 6 several times.

> **Note.** If you have unblocked the ion transfer capillary, the Convectron gauge pressure should increase to a normal value (approximately 1 Torr). If you can not clear the ion transfer capillary by this method, use the instructions for removing the ion transfer capillary from the spray shield in the topic **Maintaining the API Stack** on page 4-11. Then, if you wish, try clearing the ion transfer capillary from the exit end by the same method. Otherwise, replace the ion transfer capillary with a new one.

7. Push the API flange assembly against the spray shield.
8. Secure the API flange to the spray shield with the two flange retainer bolts.

Maintaining the API Stack

The API stack includes the spray shield, ion sweep cone, spray cone, ion transfer capillary, capillary lens and skimmer mount, and the tube lens, and skimmer. The ion transfer capillary has a finite lifetime. You need to replace the ion transfer capillary if the ion transfer capillary bore becomes corroded or damaged. You also need to clean the spray shield, ion sweep cone, spray cone, ion transfer capillary, tube lens, skimmer, and the other components of the API stack on a periodic basis.

It is not necessary to vent the system in order to replace the ion transfer capillary. To replace the ion transfer capillary, proceed as follows:

1. Turn off the flow of liquid from the LC (or other sample introduction device) to the API source. To turn off the flow of liquid from the LC to the API source, do the following:
   a. Choose **Start > Programs > Xcalibur > LCQ Tune** to open the Tune Plus window.
   b. In the Tune Plus window, choose **Setup > Direct Inlet Control** (or click on the LC pump button). The Inlet Direct Control dialog box appears.
   c. Select the LC tab and click on **Stop** to stop the LC pump.

2. Place the electronics service switch (located on the right side of the MS detector) in the Service position to turn off the non-vacuum system voltages.

CAUTION. Make sure that the LCQ Advantage MAX electronics service switch is in the Service position before you proceed.

3. Loosen the two flange retainer bolts that secure the API flange (APCI or ESI) to the spray shield.
4. Pull back and remove the API probe flange from the spray shield.

CAUTION. The APCI vaporizer typically operates at 400 to 600 °C and the ion sweep cone, spray cone, and ion transfer capillary typically operate at 100 to 300 °C. Allow these components to come to ambient temperature before proceeding.

5. Remove the ion sweep cone from the spray cone.
6. Using the ion transfer capillary tool, (P/N 70111-20258) unscrew the ion transfer capillary from the spray cone.
7. Using the ion transfer capillary tool, hook the ion transfer capillary and remove it. Replace the Kalrez O-ring (P/N 00107-12750) if necessary.
8. Screw the new ion transfer capillary into the spray cone.
9. Install and bolt the API probe flange to the spray shield.
10. Place the electronics service switch in the Normal position.
11. Begin operation using the LC or other sample introduction device.

To replace or to clean the spray shield, tube lens and skimmer mount, tube lens, skimmer, or other API components, do each of the following, as described in this topic:

- Shut down and vent the system
- Remove the API stack
- Disassemble the API stack
- Clean the API stack components
- Reassemble the API stack
- Reinstall the API stack
- Start up the system

Note. You should flush the spray shield, ion sweep cone, spray cone and the bore of the ion transfer capillary at the end of each working day with a 50:50 methanol / water solution. Refer to the topic **Flushing the Spray Shield, Ion sweep cone, Spray Cone, and Ion Transfer Capillary** on page 4-8.

Shutting Down the System

Shut down and vent the system as described in the topic **Shutting Down the System Completely** in the **System Shutdown, Startup, and Reset** chapter.

Go on to the next topic: **Removing the API Stack**.

Removing the API Stack

To remove the API stack proceed as follows:

CAUTION. Make sure that the LCQ Advantage MAX power cord is unplugged before you proceed.

1. Loosen the two flange retainer bolts that secure the API probe assembly to the spray shield.
2. Pull back the API probe assembly from the spray shield.
3. Disconnect the waste line from the spray shield.
4. Disconnect the API stack electrical cable from the spray shield by turning the tab on the end of the cable counterclockwise (toward you) and then pulling the cable free.
5. Grasp the spray shield with both hands and carefully pull it and the API stack free from the vacuum manifold. Place the API stack on a clean surface with the spray shield down. Allow the API stack to cool to ambient temperature before you disassemble the API stack.

Note. If you are unable to dislodge the spray shield from the vacuum manifold, reattach the API flange to the spray shield and then pull the flange away from the vacuum manifold.

The API stack is shown in Figure 4-1.

Go on to the next topic: **Disassembling the API Stack.**

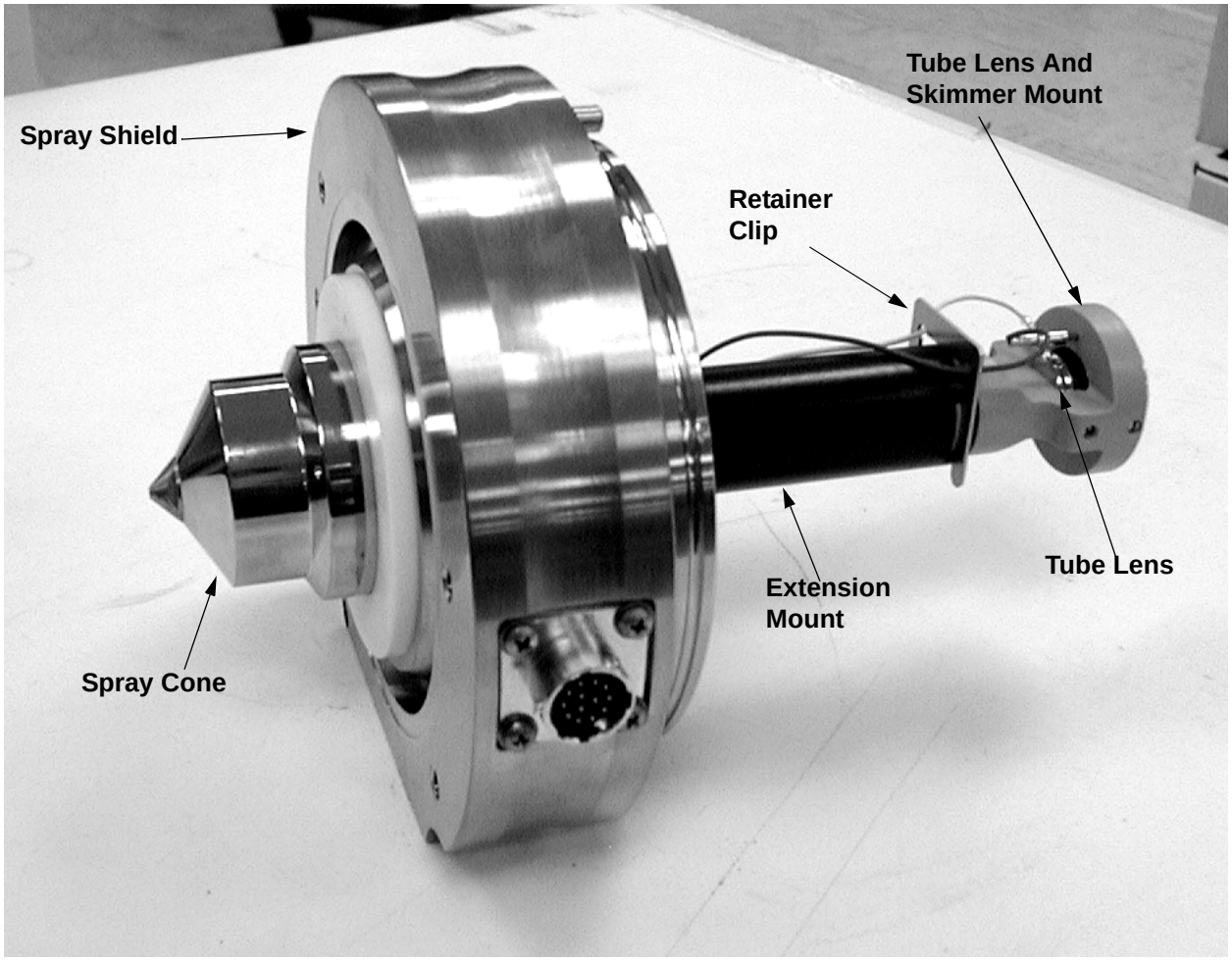

Figure 4-1. API stack

Disassembling the API Stack

Wait for the API stack to cool to ambient temperature before you disassemble it. Refer to Figure 4-1 and Figure 4-2 for the location of the various API stack components.

To disassemble the API stack proceed as follows:

> **Note.** Wear clean, lint-free, nylon or cotton gloves when you handle the API stack components.

1. Disconnect the waste fitting so that the API stack can easily be set on a flat surface.
2. Remove the ion sweep cone.

3. Remove the ion transfer capillary. (Refer to **Maintaining the API Stack**)
4. Disconnect the skimmer electrical lead from the lead pin on the skimmer.
5. Disconnect the tube lens electrical lead from the lead pin on the tube lens.
6. Push the tube lens and skimmer mount into the extension mount and remove the retaining clip. Allow the tube lens and skimmer mount to move back slowly.

> **Caution.** The tube lens and skimmer mount is spring loaded. Ensure that the spring (P/N 00201-11599) that is compressed in the extension mount does not fly free when the tube lens and skimmer mount is removed.

7. Detach the skimmer from the tube lens and skimmer mount by pushing on its lead pin.
8. Detach the tube lens from the tube lens and skimmer mount by pushing the tube lens away from the mount.
9. Pull the extension mount from the spray shield
10. Disconnect the heater cable connector for the heater.
11. Loosen the two thumb nuts on the spray shield and remove the heater and the graphite seal.

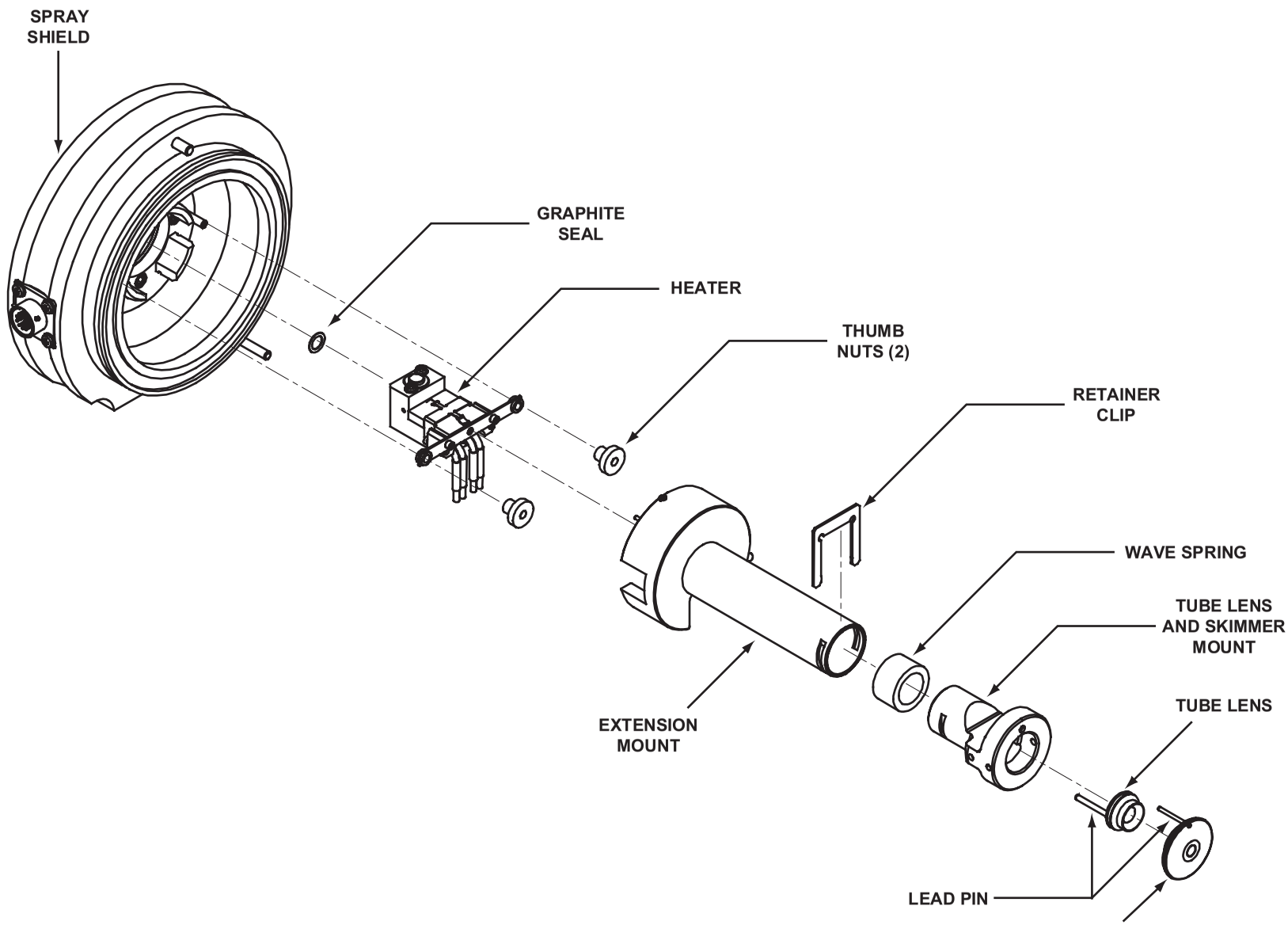

Figure 4-2. Exploded view of the back of the API stack

Cleaning the API Stack Components

Inspect the API stack components for contamination that results from routine use. If dirty, clean the API stack components as follows.

CAUTION. The APCI vaporizer typically operates at 400 to 600 °C and the ion sweep cone, spray cone, and ion transfer capillary typically operate at 100 to 300 °C. Allow these components to come to ambient temperature before proceeding.

Note. Solvents required for cleaning the API stack components: For most cleaning applications, HPLC grade methanol is the solvent of choice. However, use of buffers or salt solutions may require that you use an acidic, aqueous solution. If you need to use a solvent other than methanol, after cleaning the ion source components, flush the component with water and then flush it with methanol as a final wash. In all cases, ensure that all solvent has evaporated from the component(s) before reassembly.

Cleaning the Tube Lens

Clean the inner bore of the tube lens with HPLC-grade methanol and a cotton-tipped applicator (swab).

Cleaning the Skimmer

Look at the tip of the cone on the skimmer for a region that shows discoloration due to contamination. (The off-axis pattern that you see is a result of the sample/solvent that exits from the off-axis ion transfer capillary.) Use methanol and a cotton-tipped applicator or Kimwipe to clean the entrance and exit sides of the skimmer.

Cleaning the Ion Transfer Capillary

The ion transfer capillary is easily replaceable without venting the LCQ Advantage MAX, however, if you wish to clean the ion transfer capillary, do the following:

1. Use methanol and a Kimwipe to clean the entrance end, exit end, and exterior of the ion transfer capillary.
2. Clear the bore of the ion transfer capillary by inserting and withdrawing the 28 gauge, 10-in. hypodermic tube (P/N 00106-20000) included in your accessory kit.
3. Flush the bore of the ion transfer capillary with methanol.
4. Dry the bore of the ion transfer capillary with nitrogen gas.

5. Ensure that no residue or fibers remain at the exit end of the ion transfer capillary. Fibers in this area may become charged and interfere with the normal flow of ions.

Cleaning the Spray Shield and Spray Shield Cone

To clean the spray shield and spray shield cone, wipe the inside and outside of the spray shield and spray shield cone with methanol and a Kimwipe.

Go on to the next topic: **Reassembling the API Stack**.

Reassembling the API Stack

To reassemble the API stack, proceed as follows. Refer to Figure 4-1 and Figure 4-2 for the location of the API stack components.

1. It is recommended that you replace the graphite seal (P/N 7011-20216)
2. Seat the heater in the spray shield and secure with the two thumb nuts.
3. Reconnect the heater cable to the connector that is held by the spray shield. Turn the locking ring on the cable clockwise to lock the cable.
4. Insert the extension mount.
5. Reinstall the wave spring, tube lens and skimmer mount into the extension mount and use the retaining clip to hold it in place.

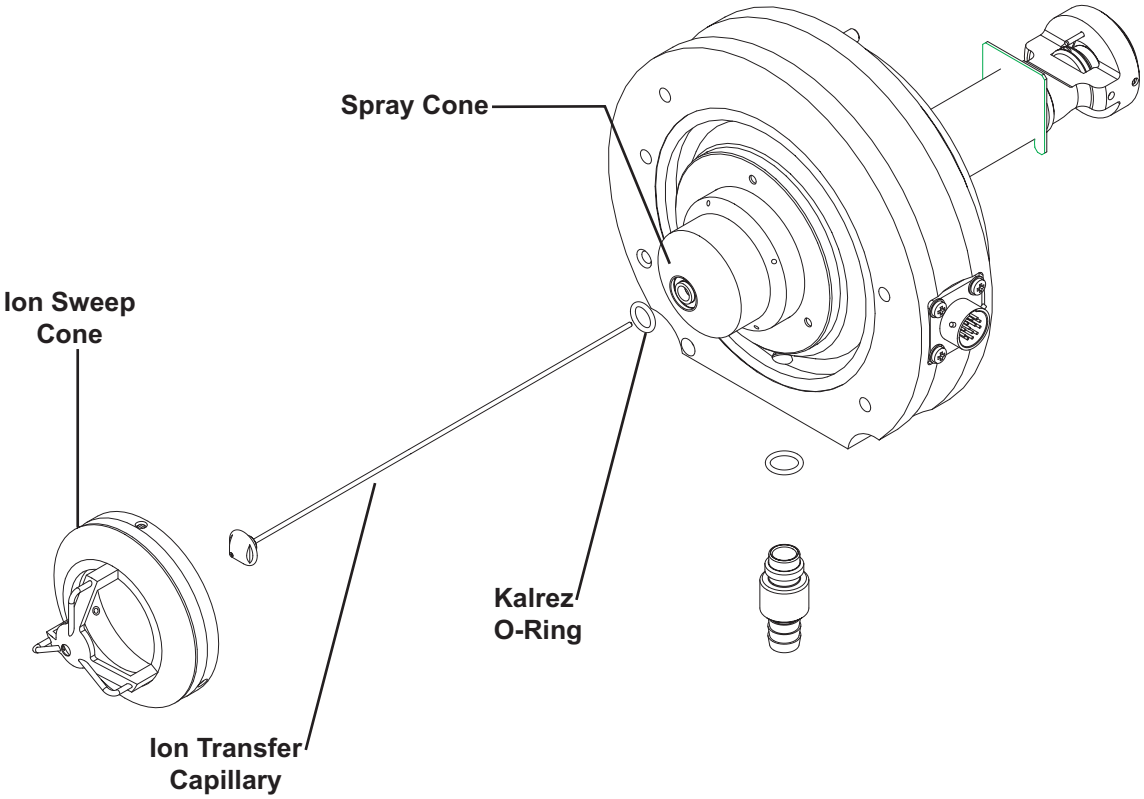

Figure 4-3. Exploded view of the front of the API stack

6. Align the guide pin on the tube lens with the guide pin hole on the tube lens and skimmer mount. Reinstall the tube lens by inserting it into the tube lens and skimmer mount.
7. Align the lead pin on the skimmer with the lead pin hole on the tube lens and skimmer mount. Reinstall the skimmer by inserting it into the tube lens and skimmer mount.
8. Reconnect the tube lens lead to the lead pin on the tube lens. Use needlenose pliers if necessary.
9. Reconnect the skimmer lead to the lead pin on the skimmer. Use needlenose pliers if necessary.
10. Inspect the API stack. Ensure that the 3.85-in. ID O-ring (P/N 00107-14100) has no cracks, is otherwise in good condition, and is properly seated on the spray shield. Ensure that all components fit together tightly.

11. Reinstall the ion transfer capillary. See Figure 4-3. Replace the Kalrez O-ring (P/N 00107-12750) if necessary. Refer to the topic **Maintaining the API Stack** on page 4-11.
12. Reinstall the ion sweep cone (if being used).

Go on to the next topic: **Reinstalling the API Stack.**

Reinstalling the API Stack

To reinstall the API stack, proceed as follows:

1. Align the API stack with the opening in the front of the vacuum manifold. Turn the API stack until the guide pin on the spray shield is aligned with the guide pin hole in the vacuum manifold.
2. Carefully insert the API stack into the opening in the vacuum manifold until it seats in the vacuum manifold.
3. Reconnect the API stack cable to the connector on the spray shield. Turn the tab on the end of the cable clockwise (away from you) to secure the cable.
4. Reconnect the waste line to the spray shield.

Go on to the next topic: **Starting Up the System**.

Starting Up the System

Start up the system as described in the topic **Starting Up the System After a Complete Shutdown** in the **System Shutdown, Startup, and Reset** chapter.

4.4 Cleaning the Ion Optics and Mass Analyzer

An accumulation of chemicals on the surfaces of the ion optics and mass analyzer forms an insulating layer that can modify the electrical fields that control ion transmission and mass analysis. Therefore, clean ion optics and mass analyzer are essential for the proper operation of the instrument. The ion optics and mass analyzer require cleaning less often than the API source. The frequency of cleaning depends on the type and quantity of the compounds that you analyze.

Cleaning the ion optics and mass analyzer involves the following steps, as described in this section:

- Shut down and vent the system
- Remove the top cover of the MS detector
- Remover the top cover plate of the vacuum manifold
- Remove the ion optics and mass analyzer
- Disassemble the ion optics and mass analyzer
- Clean the ion optics and mass analyzer parts
- Reassemble the ion optics and mass analyzer
- Reinstall the ion optics and mass analyzer
- Reinstall the top cover plate of the vacuum manifold
- Reinstall the top cover of the MS detector
- Start up the system
- Tune the ring electrode and octapole RF voltages

Shutting Down the System

Shut down and vent the system as described in the topic **Shutting Down the System Completely** in the **System Shutdown, Startup, and Reset** chapter.

CAUTION. Make sure that the LCQ Advantage MAX power cord is unplugged before you proceed.

Go on to the next topic: **Removing the Top Cover of the MS Detector**.

Removing the Top Cover of the MS Detector

Remove the top cover of the MS detector as follows:

1. Open the front door of the MS detector by loosening the 1/4-in. Allen screw on the right side of the door with an Allen wrench. Be careful not to damage any fused silica tubing leading to the API source.
2. Unclip the two fasteners that hold the top cover to the MS detector chassis. The fasteners are located in the upper right and left corners of the chassis.
3. Slide the top cover forward by about 1.25 cm (0.5 in.).
4. With one hand under the center of the top cover, lift the top cover up and away from the MS detector.

Go on to the next topic: **Removing the Top Cover Plate of the Vacuum Manifold**.

Removing the Top Cover Plate of the Vacuum Manifold

You need to remove the top cover plate of the vacuum manifold to access the ion optics, mass analyzer, and ion detection system. The top cover plate is held in place by gravity and by the air pressure differential between the vacuum manifold and atmospheric pressure. Five cables and one gas line are connected to the top cover plate. See Figure 4-4.

To remove the top cover plate, proceed as follows:

1. Disconnect from the Switched Balun PCB (at J1) the endcaps RF / octapole RF coaxial cable that comes from the Waveform Amplifier PCB.
2. Disconnect from the Switched Balun PCB (at P1) the endcaps dc offset cable.
3. Disconnect the electron multiplier high voltage coaxial cable that comes from the electron multiplier power supply.
4. Disconnect from the Top Cover PCB (at ACQU/DSP) the electrometer cable. (If necessary, use a small screw driver to loosen the screws that secure the cable.)
5. Disconnect from the Top Cover PCB (at ANALYZER) the lenses / octapole dc offsets cable that comes from the System Control PCB.
6. Use a 7/16-in. open-end wrench to disconnect the helium damping gas line from the fitting.
7. Carefully lift the top cover plate straight up by its two handles. Take care not to damage the components on the underside of the cover plate. Place the cover plate upside down (supported on its handles) on a flat surface.

8. Cover the opening in the top of the vacuum manifold with a large, lint-free tissue.

Go on to the next topic: **Removing the Ion Optics and Mass Analyzer**.

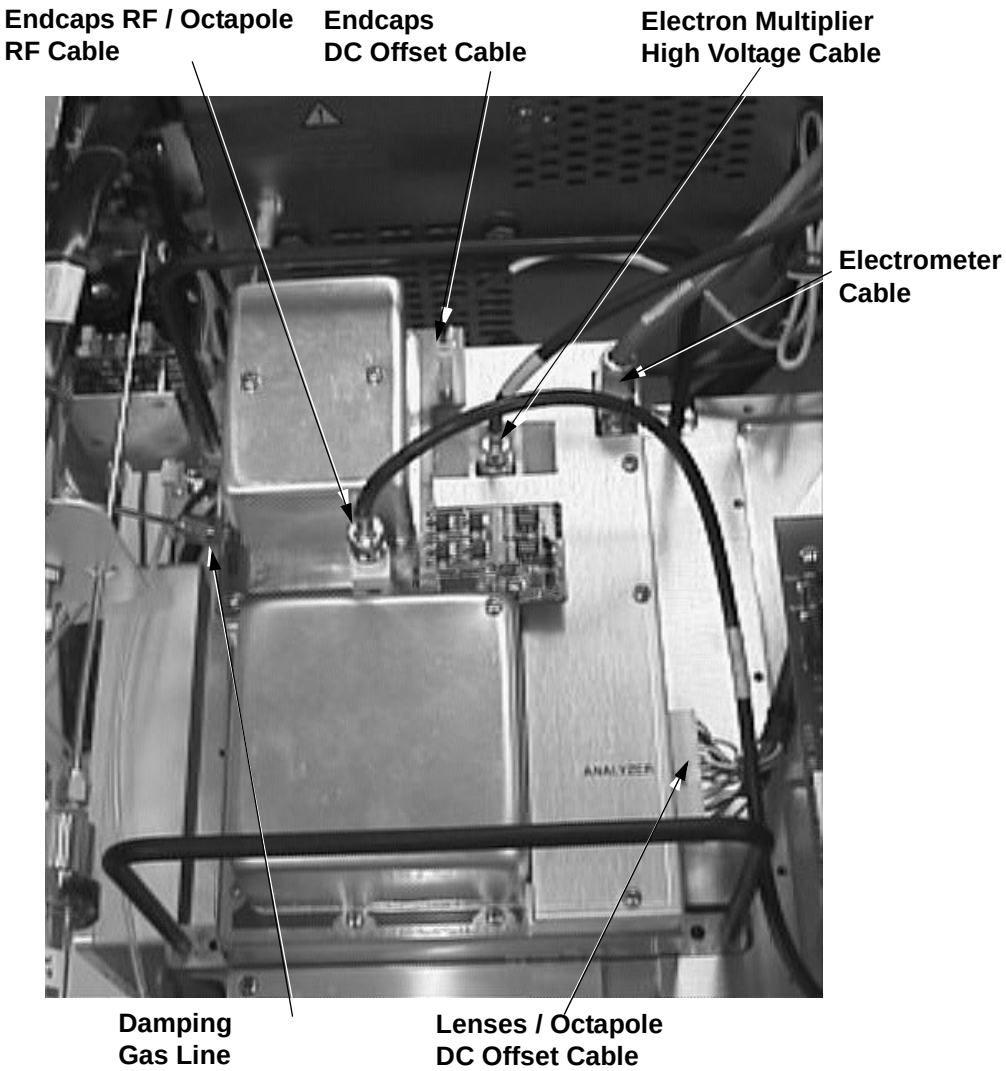

Figure 4-4. Electrical connections and damping gas line connection to the top cover plate of the vacuum manifold

Removing the Ion Optics and Mass Analyzer

The ion optics and mass analyzer are mounted on a baffle on the underside of the top cover plate of the vacuum manifold. See Figure 4-5.

Use the following procedure to remove the ion optics and mass analyzer from the top cover plate. Refer to Figure 4-6 and Figure 4-7 for the location of the ion optics and mass analyzer components.

> **Note.** Wear clean, lint-free, nylon or cotton gloves when you handle the ion optics and mass analyzer components.

1. Prepare a clean work area by covering the area with lint-free paper. Place each part on the paper as you remove it.
2. Disconnect the four electrical leads to the split (first) octapole. Hold the octapole mount with one hand; loosen and remove the two thumb screws that hold the octapole mount to the baffle on the top cover plate of the vacuum manifold. See Figure 4-5.
3. Remove the split (first) octapole and octapole mount.
4. Disconnect the electrical lead to the interoctapole lens. Remove the interoctapole lens.
5. Disconnect the electrical leads to the second octapole and to the exit lens, exit endcap electrode, and entrance endcap electrode of the mass analyzer.

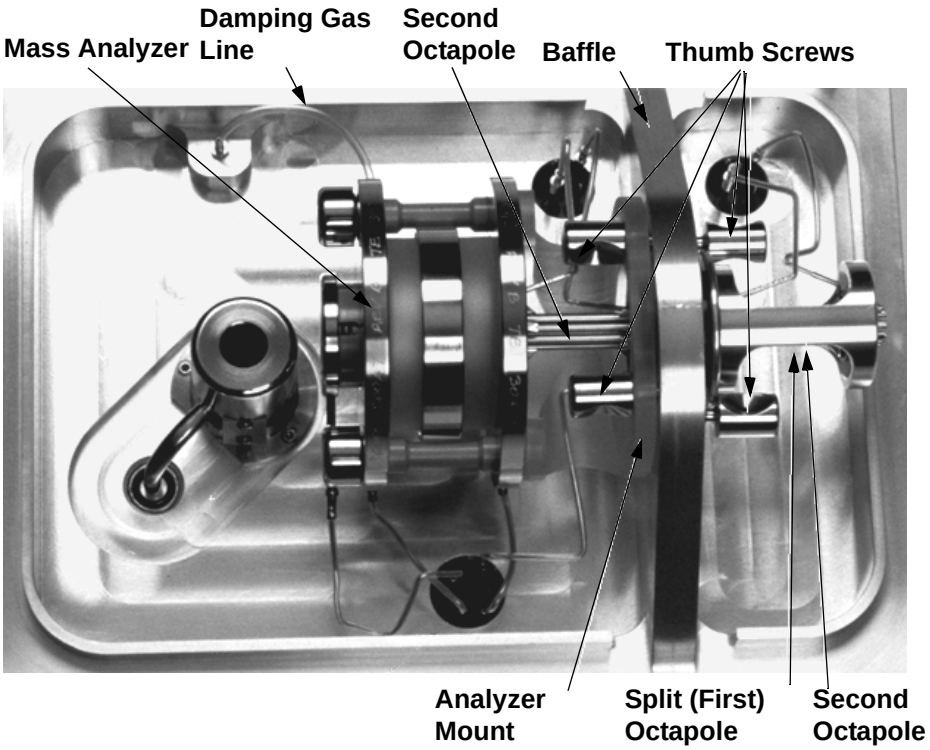

Figure 4-5. Mass analyzer and ion optics, mounted to the baffle on the top cover plate of the vacuum manifold

6. Disconnect the damping gas line from the nipple on the exit endcap electrode by pulling the line free from the nipple (Figure 4-5).
7. Hold the mass analyzer with one hand; loosen the two thumb screws that hold the analyzer mount to the baffle (Figure 4-5).
8. With one hand holding the mass analyzer and the other hand holding the analyzer mount, lift the mass analyzer, second octapole, and analyzer mount out and away from the baffle on the top cover plate. Be careful not to touch the electron multiplier with the mass analyzer. This could damage the electropolished surface.

Go on to the next topic: **Disassembling the Ion Optics and Mass Analyzer**.

Disassembling the Ion Optics and Mass Analyzer

To disassemble the ion optics and mass analyzer, proceed as follows. Refer to Figure 4-6 and Figure 4-7 for the location of the ion optics and mass analyzer components.

1. Remove the split (first) octapole from the octapole mount.
2. Remove the second octapole from the analyzer mount.
3. Disassemble the mass analyzer as follows:
   a. Remove the exit lens by pulling the exit lens out of the exit lens sleeve. Be careful not to damage the pin.
   b. Remove the exit lens sleeve by squeezing the sleeve and pulling it out of the recess in the exit endcap electrode.
   c. Unscrew and remove the two nuts from the posts.
   d. Remove the two spring washers from the posts.
   e. Remove the exit endcap electrode from the posts.
   f. Remove the two spacer rings and the ring electrode.
   g. Remove the entrance endcap electrode from the posts.
   h. Remove the octapole adapter sleeve by and pulling it out of the recess in the entrance endcap electrode.
   i. Unscrew and remove the two posts from the analyzer mount.

Go on to the next topic: **Cleaning the Ion Optics and Mass Analyzer Parts**.

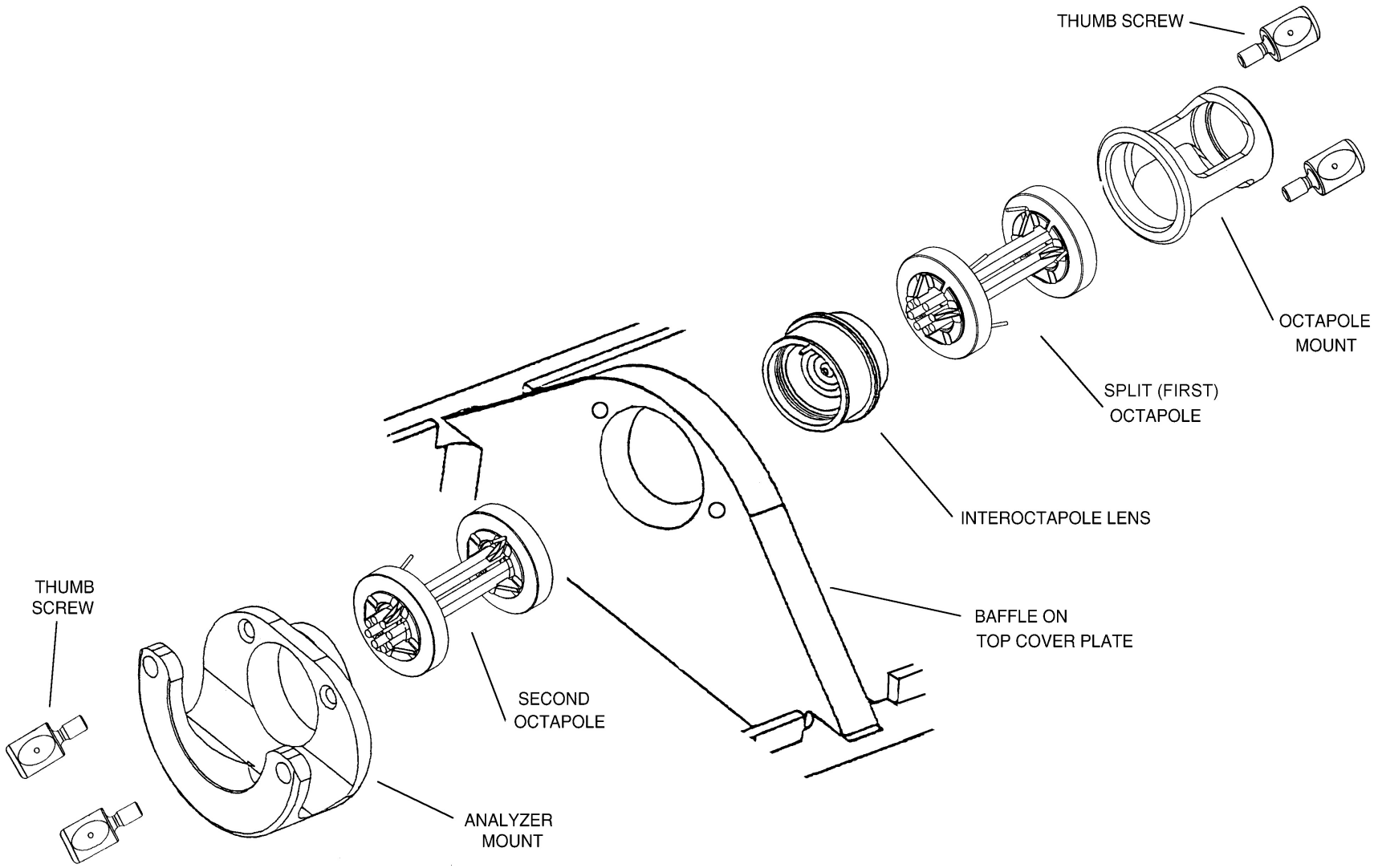

Figure 4-6. Exploded view of the ion optics

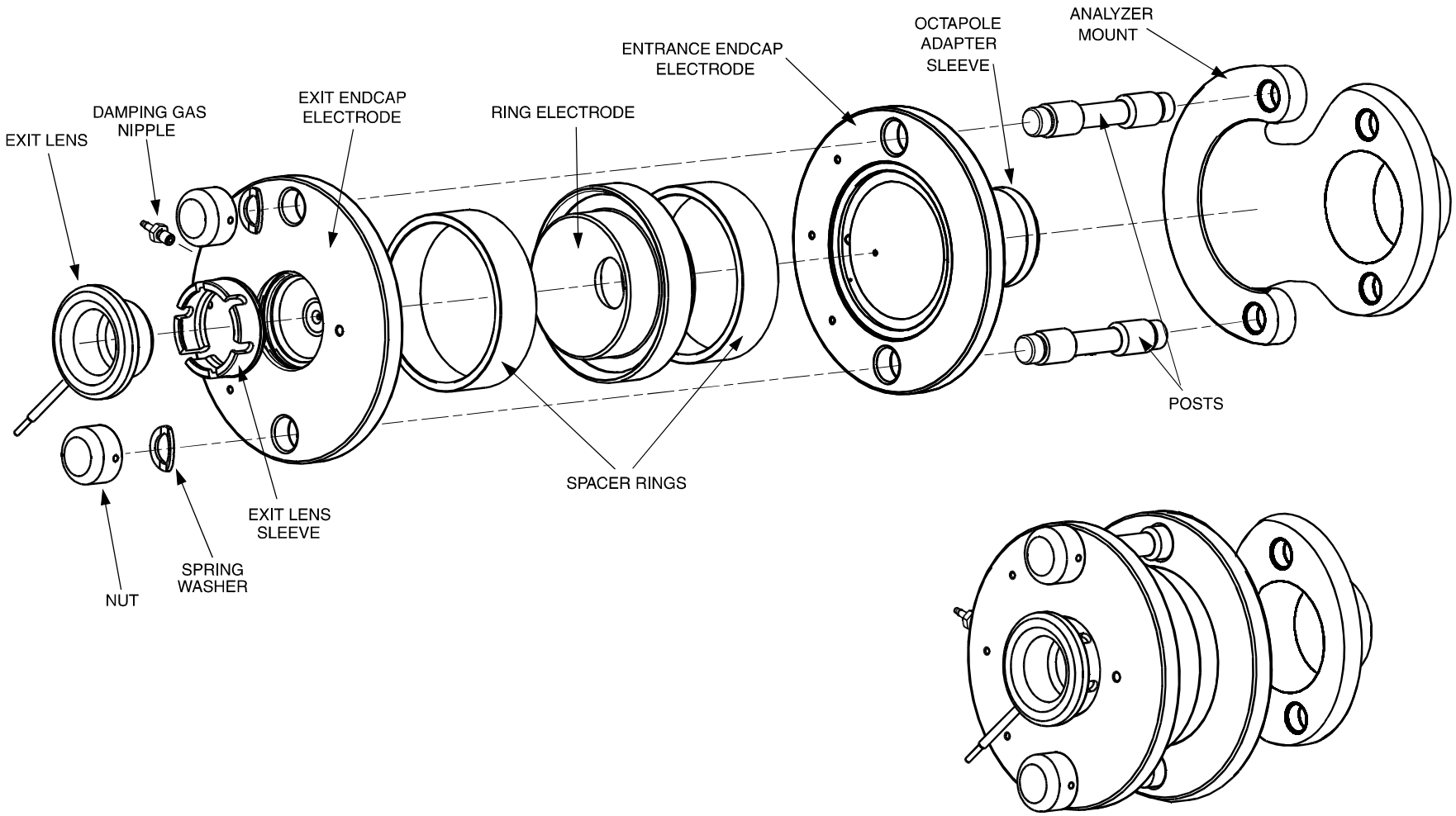

Figure 4-7. Exploded and assembled views of the mass analyzer

Cleaning the Ion Optics and Mass Analyzer Parts

Use the following procedure to remove contamination from the ion optics and mass analyzer parts. Clean each part in turn. After cleaning, place each part on a clean, lint free surface.

Caution. Take care not to chip, scratch, or break the spacer rings of the mass analyzer. Take care not to bump or jar the octapoles. Do not place the octapoles in an ultrasonic cleaner.

Note. When you clean the ion optics and mass analyzer parts, pay particular attention to the inside surfaces.

1. With a soft tooth brush or lint-free swab, scrub the ion optics or mass analyzer part with a solution of detergent and water.
2. Rinse the part with tap water to remove the detergent.
3. Rinse the part with distilled water.
4. Place the part in a tall beaker and immerse it completely in HPLC-grade methanol. Move the part up and down in the methanol for 15 s.

Note. Wear clean, lint-free, nylon or cotton gloves to handle the parts after you clean them in methanol.

5. Remove the part from the methanol bath; then rinse it thoroughly with fresh methanol.
6. Dry the part with a rapid stream of nitrogen gas.
7. Inspect each part for contamination and dust. If necessary, repeat the cleaning procedure.

After all ion optics and mass analyzer parts are clean and dry, go on to the next topic: **Reassembling the Ion Optics and Mass Analyzer**.

Reassembling the Ion Optics and Mass Analyzer

Use the following procedure to reassemble the ion optics and mass analyzer. Refer to Figure 4-6 on page 4-26 and Figure 4-7 on page 4-27.

Note. Wear clean, lint-free, nylon or cotton gloves when you handle components of the mass analyzer.

1. Reassemble the mass analyzer as follows:

a. Reinstall the two posts by screwing them by hand into the analyzer mount. (Both ends are the same.)

b. Reinstall the octapole adapter sleeve by inserting it into the entrance endcap electrode. (The entrance endcap electrode is the one **without** the damping gas nipple.)

c. Reinstall the entrance endcap electrode onto the posts. Ensure that the electrode is oriented such that the convex surface faces away from the analyzer mount. Also, the opening in which the pin on the end of the electrical lead inserts should be close to the top cover plate when the analyzer mount is installed on the top cover plate.

Caution. Handle the spacer rings carefully. Do not scrape the spacer rings against any metal surfaces. Metal deposits on the surfaces of the spacer rings might cause the RF voltage to arc across the spacer rings to the endcaps. Do not overtighten the mass analyzer nuts.

d. Place a quartz spacer ring into the groove in the entrance endcap electrode.

e. Reinstall the ring electrode onto the spacer ring so that the spacer ring is held securely between the electrodes. The orientation of the ring electrode is unimportant. (Both sides are the same.)

f. Reinstall the second quartz spacer ring into the groove in the ring electrode.

g. Reinstall the exit endcap electrode (the one with the damping gas nipple) on the posts such that the spacer ring is held in place between the ring electrode and the exit endcap electrode. Make sure that the electrode is oriented such that the convex surface faces the spacer ring. Also, the damping gas nipple should point toward the top cover plate when the analyzer mount is installed on the top cover plate.

h. Inspect the mass analyzer assembly. Ensure that all the parts are aligned properly and that they all fit together snugly.

i. Reinstall the two spring washers on the posts such that the convex side of the washer is toward the exit endcap electrode.

j. Reinstall the two analyzer nuts onto the posts and tighten the nuts by hand until they are finger tight. Do not overtighten the nuts.

k. Squeeze the exit lens sleeve and insert it into the recess in the exit endcap electrode. See Figure 4-7 on page 4-27 for the proper orientation of the exit lens sleeve.

l. Insert the exit lens into the exit lens sleeve such that the lead pin on the exit lens points in the same direction as the 8-pin feedthrough when the analyzer mount is installed on the top cover plate. Make sure that the exit lens lead pin does not contact the nut on the end of the mass analyzer post.

2. Insert the split (first) octapole into the octapole mount. The split octapole has four lead pins.
3. Insert the nonsplit (second) octapole through the cylindrical end of the analyzer mount until it seats in the octapole adapter sleeve in the entrance endcap electrode of the mass analyzer. Turn the octapole until the lead pins are on the same side as the 4-pin feedthrough (when the analyzer mount is mounted on the top cover plate).

Go on to the next topic: **Reinstalling the Ion Optics and Mass Analyzer**.

Reinstalling the Ion Optics and Mass Analyzer

Use the following procedure to reinstall the ion optics and mass analyzer onto the top cover plate of the vacuum manifold:

> **Note**. Wear clean, lint-free, nylon or cotton gloves when you handle components of the ion optics and mass analyzer.

1. Insert the cylindrical end of the analyzer mount (with the mass analyzer and second octapole [the octapole with two lead pins] attached) into the opening in the baffle on the top cover plate of the vacuum manifold. Ensure that the open side of the analyzer mount is away from the top cover plate. See Figure 4-5.
2. Secure the analyzer mount to the baffle with the two thumb screws.
3. Insert the interoctapole lens, lead pin first, through the opening in the baffle. Turn the interoctapole lens until the lead pin is on the same side as the 8-pin feedthrough. Ensure that the second octapole is held securely between the endcap electrode and the interoctapole lens. Also ensure that the lead pins on the second octapole are on the same side as the 4-pin feedthrough.
4. Attach the split (first) octapole and octapole mount to the baffle on the top cover plate with the two thumb screws. Ensure that the interoctapole lens is held securely between the two octapoles. Also ensure that the lead pins on the split octapole are on the same side as the 4-pin feedthrough.
5. Inspect the ion optics. Ensure that all the parts are aligned properly and that they all fit together snugly.
6. Reconnect the four electrical leads from the 4-pin feedthrough to the split (first) octapole according to the wiring diagram shown in Figure 4-8 on page 4-32.
7. Reconnect the two electrical leads from the other 4-pin feedthrough to the second octapole according to the wiring diagram shown in Figure 4-8.

8. Reconnect the electrical lead from pin 2 of the 8-pin feedthrough to the interoctapole lens according to the wiring diagram shown in Figure 4-8.
9. Reconnect the electrical lead from pin 4 of the 8-pin feedthrough to the entrance endcap electrode according to the wiring diagram shown in Figure 4-8, by inserting the pin on the end of the lead into the socket in the electrode.
10. Reconnect the electrical lead from pin 5 of the 8-pin feedthrough to the exit endcap electrode according to the wiring diagram shown in Figure 4-8, by inserting the pin on the end of the lead into the socket in the electrode.
11. Reconnect the electrical lead from pin 7 of the 8-pin feedthrough to the exit lens according to the wiring diagram shown in Figure 4-8. Ensure that the exit lens lead pin does not contact the nut.
12. Reconnect the damping gas line to the nipple on the exit endcap electrode.

Note. Check all leads and ensure that they are secure and that they go to the proper electrodes.

Go on to the next topic: **Cleaning the Ion Detection System**.

Cleaning the Ion Detection System

The conversion dynode and electron multiplier of the ion detection system must be kept dust free. Clean the conversion dynode and electron multiplier whenever you remove the top cover plate of the vacuum manifold. Cleaning the conversion dynode and electron multiplier involves only blowing them with clean, dry gas such as nitrogen. Freon gas is not recommended. **Do not use liquids to clean the ion detection system components.** Always cover the opening in the top of the vacuum manifold with a large, lint-free tissue whenever you remove the top cover plate of the vacuum manifold.

Go on to the next topic: **Reinstalling the Top Cover Plate of the Vacuum Manifold**.

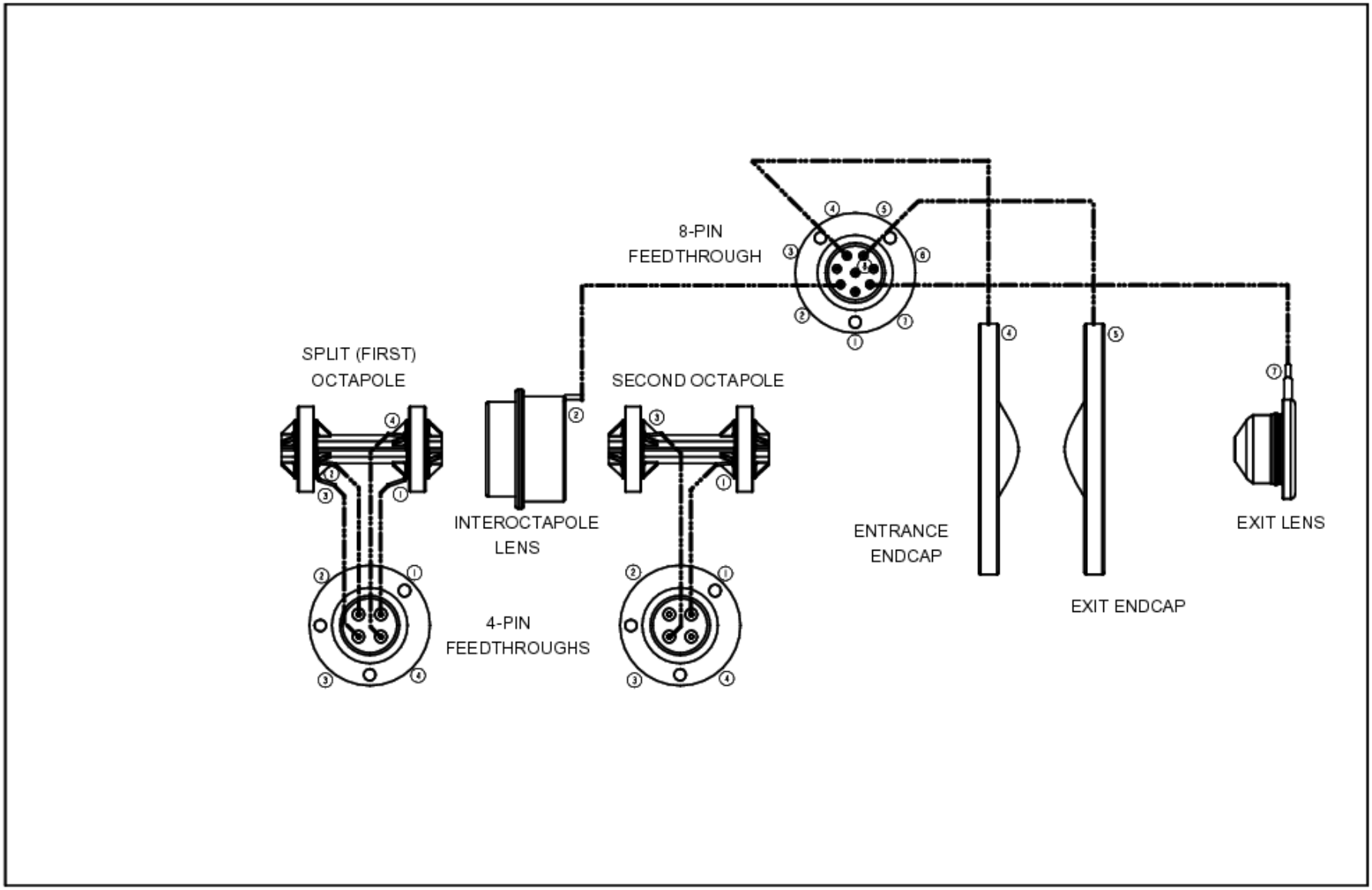

Figure 4-8. Wiring diagram for the ion optics and mass analyzer

Reinstalling the Top Cover Plate of the Vacuum Manifold

Use the following procedure to reinstall the top cover plate of the vacuum manifold:

1. Remove the tissue from the opening in the top of the vacuum manifold.
2. Check the O-ring that surrounds the opening for signs of wear, and replace it if necessary (P/N 97000-40015). Make sure that the O-ring is seated properly.

> **Note.** Periodically, remove any contamination that might be on the inner walls of the manifold by wiping the inner walls with a lint-free tissue soaked in HPLC-grade methanol. Use a cotton-tipped applicator soaked in methanol to clean around inlets and feedthroughs.

3. Carefully lift the top cover plate up by its two handles and turn it over. Orient the top cover plate such that the electron multiplier is over the conversion dynode. Carefully insert the guide posts on the underside of the top cover plate into the guide holes in the vacuum manifold. Slowly lower the cover plate onto the opening in the vacuum manifold. Take care not to damage the components on the underside of the cover plate. Ensure that the cover plate is seated properly on the vacuum manifold.
4. Use a 7/16-in. open-end wrench to reconnect the helium damping gas line to the fitting. See Figure 4-4 on page 4-23.
5. Reconnect to the Switched Balun PCB (at J1) the endcaps RF / octapole RF coaxial cable that comes from the Waveform Amplifier PCB. See Figure 4-4 on page 4-23.
6. Reconnect to the Switched Balun PCB (at P1) the endcaps dc offset cable. See Figure 4-4 on page 4-23.
7. Reconnect the electron multiplier high voltage coaxial cable that comes from the electron multiplier power supply. See Figure 4-4 on page 4-23.
8. Reconnect to the Top Cover PCB (at ACQU/DSP) the electrometer cable. See Figure 4-4 on page 4-23.
9. Reconnect to the Top Cover PCB (at ANALYZER) the lenses / octapole dc offsets cable that comes from the System Control PCB. See Figure 4-4 on page 4-23.

Go on to the next topic: **Reinstalling the Top Cover of the MS Detector**.

Reinstalling the Top Cover of the MS Detector

Reinstall the top cover of the MS detector as follows:

1. Open the front door of the MS detector by loosening the 1/4-in. Allen screw on the right side of the door with an Allen wrench.
2. With one hand under the center of the top cover, place the top cover over the MS detector such that the front of the cover is about 1.2 cm (0.5 in.) in front of the front of the MS detector.
3. Slide the cover back until it is flush with the front doors (when they are closed).
4. Reclip the two fasteners to secure the top cover to the chassis.
5. Close the front door of MS detector. Tighten the 1/4-in. Allen screw on the right side of the door with an Allen wrench.
6. Reconnect any tubing between the syringe pump and the API source to accommodate your instrument configuration.

Go on to the next topic: **Starting Up the System**.

Starting Up the System

Start up the system as described in the topic **Starting Up the System After a Complete Shutdown** on page 6-7 in the **System Shutdown, Startup, and Reset** chapter.

Go on to the next topic: **Tuning the Ring Electrode and Octapole RF Voltages**.

Tuning the Ring Electrode and Octapole RF Voltages

You need to tune the ring electrode RF voltage and the octapole RF voltage whenever you service the mass analyzer or ion optics. You also need to tune these voltages if you replace any electronic assembly that is involved in producing the RF voltages. You use the Diagnostics program to tune the ring electrode and octapole RF voltages.

To tune the ring electrode and octapole RF voltages, proceed as follows:

1. Allow the LCQ Advantage MAX to pump down for at least 15 min after start up.
2. Choose **Start > Programs > Xcalibur > LCQ Tune** to open the Tune Plus window.
3. Choose **Control > On** to turn the LCQ Advantage MAX On.

4. Open the Diagnostics dialog box and Graph view as follows:
   a. In the Tune Plus window, choose **View > Display Graph View** to open the Graph view.
   b. In the Tune Plus window, choose **Diagnostics > Diagnostics** to open the Diagnostics dialog box.
   c. Select the Graphs tab to display the Graphs page.
   d. Reposition the Diagnostics dialog box so that it does not obscure the Graph view. See Figure 4-9.
5. Tune the octapole RF voltage, as follows:
   a. Select *Tune octapole frequency* in the Test Type list box.
   b. Select the Once option button in the How Many Times group box.
   c. Click on the **Start** button to start the octapole RF voltage tune program. A frequency function appears in the Graph view. See Figure 4-10. The minimum of the frequency function should lie between 2400 and 2550 kHz.
   d. When the octapole tune program is finished, LCQ Advantage MAX displays the message: *Do you want to accept the octapole frequency?* Click on the **Yes** button.

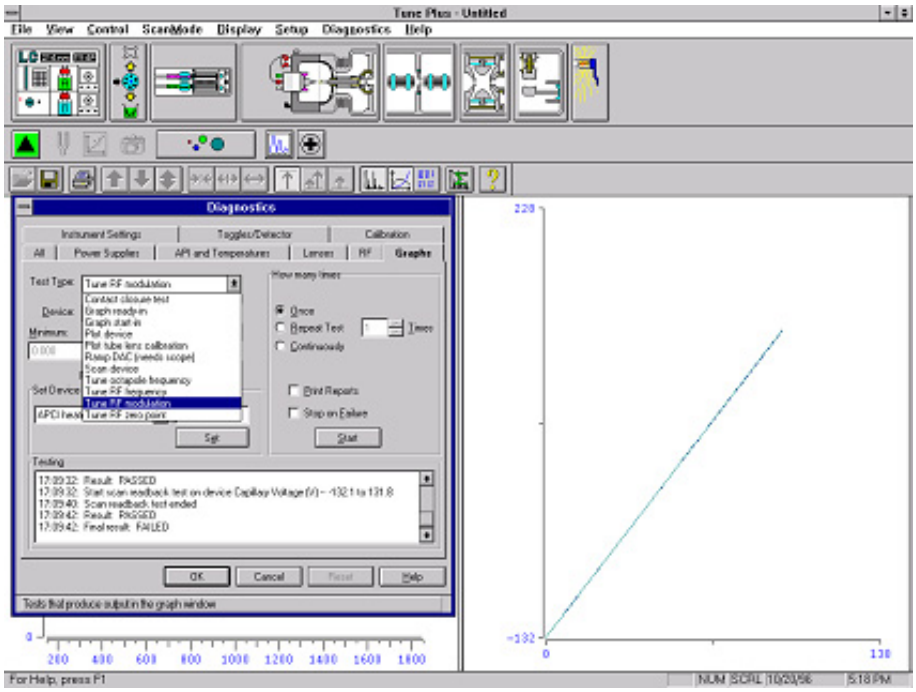

Figure 4-9. Diagnostics dialog box and Graph view

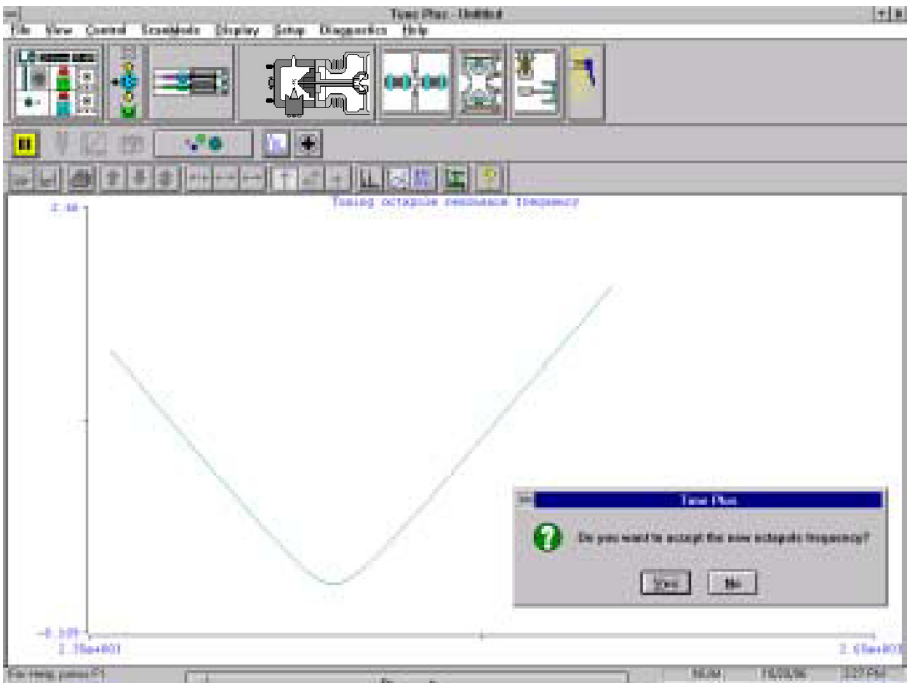

Figure 4-10. Graph view for octapole RF voltage tuning

6. Tune the ring electrode RF voltage modulation, as follows:
   a. Select *Tune RF modulation* in the Test Type text box.
   b. Select the Once option button in the How Many Times group box.
   c. Click on the **Start** button to start the ring electrode RF modulation tune program. The Graph view should look like Figure 4-11:
      - The standing wave ratio switch line should be at 10 V over the entire range.
      - The detected RF voltage should be a straight line that begins at the origin and intersects the standing wave ratio switch line near the highest mass line.
      - The RF voltage modulation should be a curved line that begins at the origin and intersects the highest mass line at a value between 3.5 and 4.5 V.
   d. Inspect the Graph view:
      - If the three above conditions are met, proceed to step 7.

- If the three above conditions are met over part of the range but not all of the range (the curves flatten or change value abruptly), tune the RF voltage frequency as described in step 7. Then, repeat step 6.

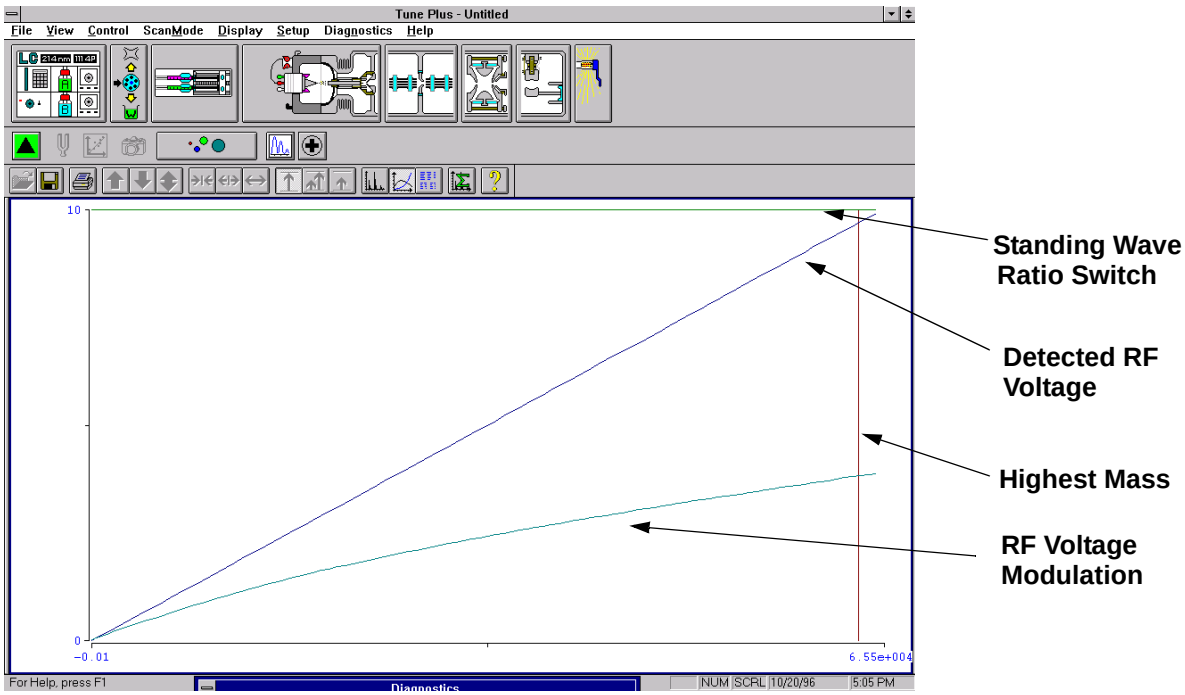

Figure 4-11. Graph view for ring electrode RF voltage modulation tuning

- If the standing wave ratio switch, detected RF voltage, and RF voltage modulation lines are all flat, then there might be a loose connection. Make sure that all cables and leads are properly connected and that the spring-loaded pin on the RF voltage feedthrough properly contacts the ring electrode. Repeat step 6.

7. Tune the ring electrode RF voltage frequency, as follows:

   a. Select *Tune RF frequency* in the Test Type text box. The Continuously option button in the How Many Times group box is automatically selected.

   b. Click on the **Start** button to start the ring electrode RF frequency tune program. The Graph view displays several tune functions, a frequency cursor, and a frequency window. See Figure 4-12.

   c. Allow the program to make at least five passes. Then determine whether the frequency cursor lies within the frequency window as follows:

- If the frequency cursor lies within the frequency window, then the ring electrode RF voltage frequency is tuned properly. Click on the **Stop** button and exit from the diagnostics program.
- If the frequency cursor lies outside the frequency window, then you need to manually adjust the ring electrode RF voltage frequency. Leave the Graph view displayed. Go on to the next step.

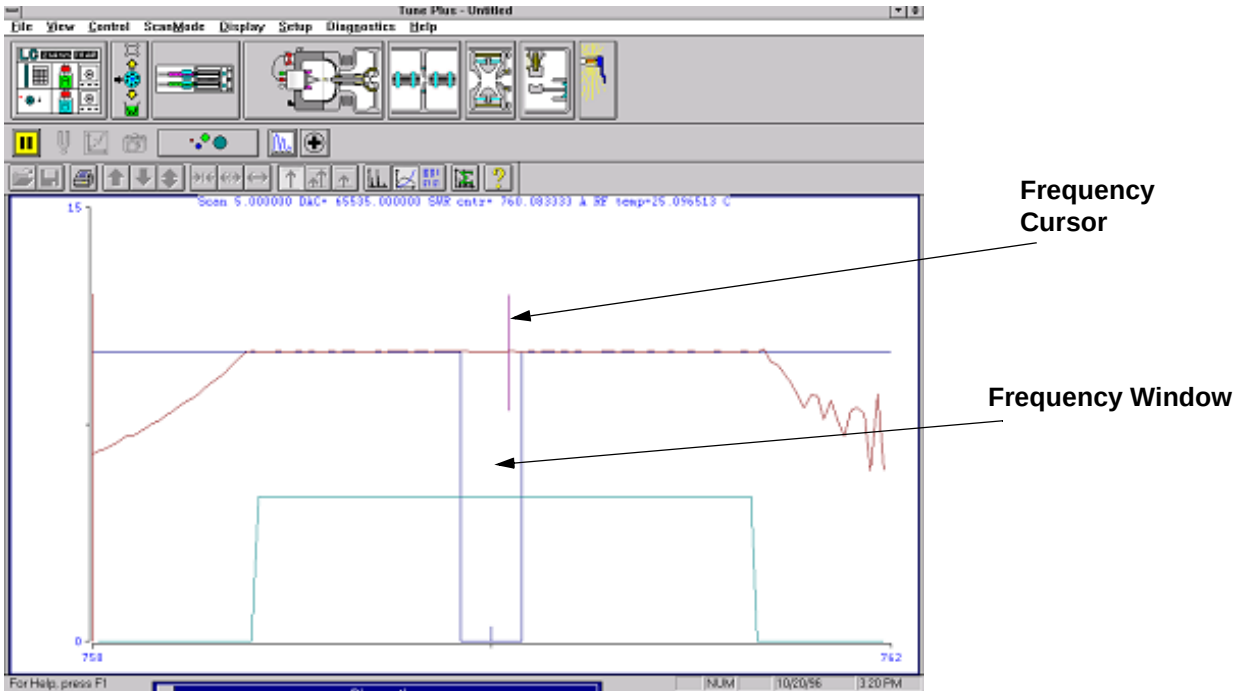

Figure 4-12. Graph view for ring electrode RF voltage tuning

8. Manually adjust the ring electrode RF voltage frequency, as follows:
   a. Open the front door of the MS detector by loosening the 1/4-in. Allen screw on the right with an Allen wrench.
   b. With a Phillips screw driver, remove the air deflector to expose the tuning stud. See Figure 4-13.
   c. With a wrench, loosen the 9/16-in. lock nut that holds the tuning stud in place.
   d. With a screw driver, turn the tuning stud until the frequency cursor lies slightly to the left of the center of the frequency window. (The cursor should shift slightly to the right when the air deflector is reinstalled.)
   e. Tighten the 9/16-in. lock nut.
   f. Reinstall the air deflector and close the front door of MS detector. Tighten the 1/4-in. Allen screw on the right side of the door with an

Allen wrench. Make sure that the frequency cursor is still within the frequency window. If necessary, repeat the above steps.

g. Click on the **Stop** button to stop the ring electrode RF voltage frequency tune program.

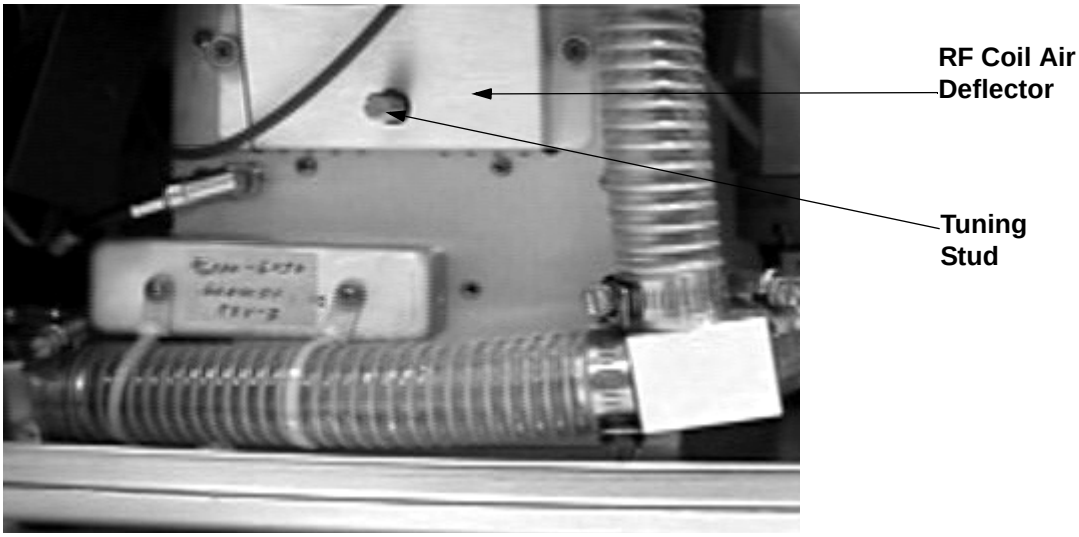

Figure 4-13. Ring electrode RF voltage tuning stud

4.5 Replacing the Electron Multiplier

The electron multiplier of the ion detection system includes an anode and a cathode. The anode and cathode have finite lifetimes. The anode loses sensitivity over time due to contamination of its surface. Things that decrease the lifetime of the cathode include heat, electron flow (which produces internal heat), air (which causes oxidation and arcing), and water (which causes arcing).

The following symptoms suggest that the electron multiplier may need replacing:

- Excessive noise in the mass spectrum
- Inability of the multiplier gain calibration procedure to achieve a gain of 3×10^5 electrons per ion with an electron multiplier voltage less than or equal to 2.5 kV

You can read the current value of the electron multiplier voltage in the Ion Detection System dialog box, which can be reached from the Tune Plus window by choosing **Setup > Ion Detection System**.

If you are having problems with the ion detection system, you need to replace the anode and cathode of the electron multiplier. You can replace the cathode separately or as part of the electron multiplier assembly.

To replace the anode and cathode of the electron multiplier, or the entire electron multiplier assembly, proceed as follows:

1. Shut down and vent the system as described in the topic **Shutting Down the System Completely** on page 6-5 in the **System Shutdown, Startup, and Reset** chapter.

CAUTION. Make sure that the LCQ Advantage MAX power cord is unplugged before you proceed.

2. Remove the top cover of the MS detector as described in the topic **Removing the Top Cover of the MS Detector** on page 4-22.
3. Remove the top cover plate of the vacuum manifold as described in the topic **Removing the Top Cover Plate of the Vacuum Manifold** on page 4-22.

Note. Wear clean, lint-free, nylon or cotton gloves when you handle the electron multiplier components.

4. With an Allen wrench, remove the two socket-head screws that hold the electron multiplier support to the top cover plate of the vacuum manifold. See Figure 4-14.
5. With one hand hold the high voltage tube and with the other hand hold the electron multiplier support. Then, detach the high voltage tube from the

high voltage feedthrough in the top cover plate and remove the electron multiplier as a unit. (The anode remains in the anode feedthrough in the top cover plate.)

6. Remove the anode from the anode feedthrough by unscrewing it counterclockwise by hand.
7. Install a new anode (P/N 96000-20076) in the anode feedthrough in the top cover plate by screwing it clockwise by hand.

   If you want to replace the entire electron multiplier, install a new electron multiplier (P/N 96000-60036) in the next step. If you want to replace only the cathode, install the old electron multiplier in the next step.

> **Caution.** Be careful not to damage the surface of the electron multiplier shield. The electron multiplier shield has been electropolished to prevent field emission.

8. With one hand holding the high voltage tube and the other hand holding the electron multiplier support, install the electron multiplier on the top cover plate. Ensure that the high voltage tube is properly inserted in the high voltage feedthrough and that the screw holes in the electron multiplier support are aligned with the screw holes in the top cover plate.
9. Reinstall the two socket-head screws that secure the electron multiplier support to the top cover plate. Tighten the screws with an Allen wrench.
   - If you installed a new electron multiplier in step 8, go to step 11.
   - If you want to replace the cathode, go on to the next step.
10. To replace the cathode, proceed as follows. See Figure 4-15.
    a. With a Phillips screwdriver, loosen (but do not remove) the two screws that secure the support plates to the high voltage ring.
    b. With one hand, hold the high voltage tube. With the other hand, hold the high voltage ring. Then, detach the high voltage tube from the high voltage feedthrough and remove the electron multiplier. Place it on a clean surface. (The electron multiplier support and the support plates should remain attached to the top cover plate.)
    c. Turn the assembly over. With a Phillips screwdriver, remove the two screws that secure the electron multiplier shield to the high voltage ring.
    d. Remove the electron multiplier shield and cathode from the high voltage ring.
    e. Insert the narrow end of a new cathode (P/N 00022-02400) first through the spring washer and then through the high voltage ring.

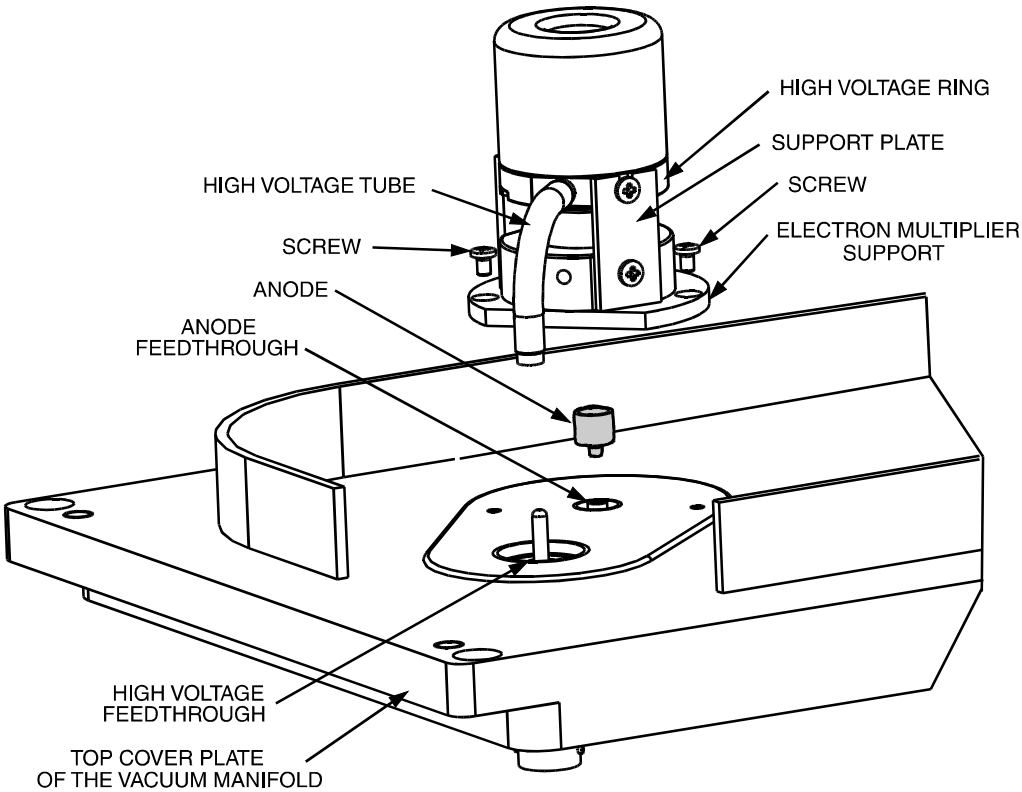

Figure 4-14. Exploded view of the electron multiplier, showing the anode

f. Place the electron multiplier shield over the wide end of the cathode such that the screw holes in the electron multiplier shield are aligned with the screw holes in the high voltage ring.

g. Hold the high voltage ring and electron multiplier shield together to depress the spring washer. Secure the high voltage ring to the electron multiplier shield by using the two Phillips-head screws. (The cathode should be held in place between the high voltage ring and the electron multiplier shield.)

h. Insert the end of the high voltage tube in the electron multiplier feedthrough in the top cover plate. Reattach the high voltage ring to the support plates by inserting the two screws in the sides of the high voltage ring into the notches in the two support plates. Tighten the two Phillips-head screws that secure the high voltage ring to the two support plates.

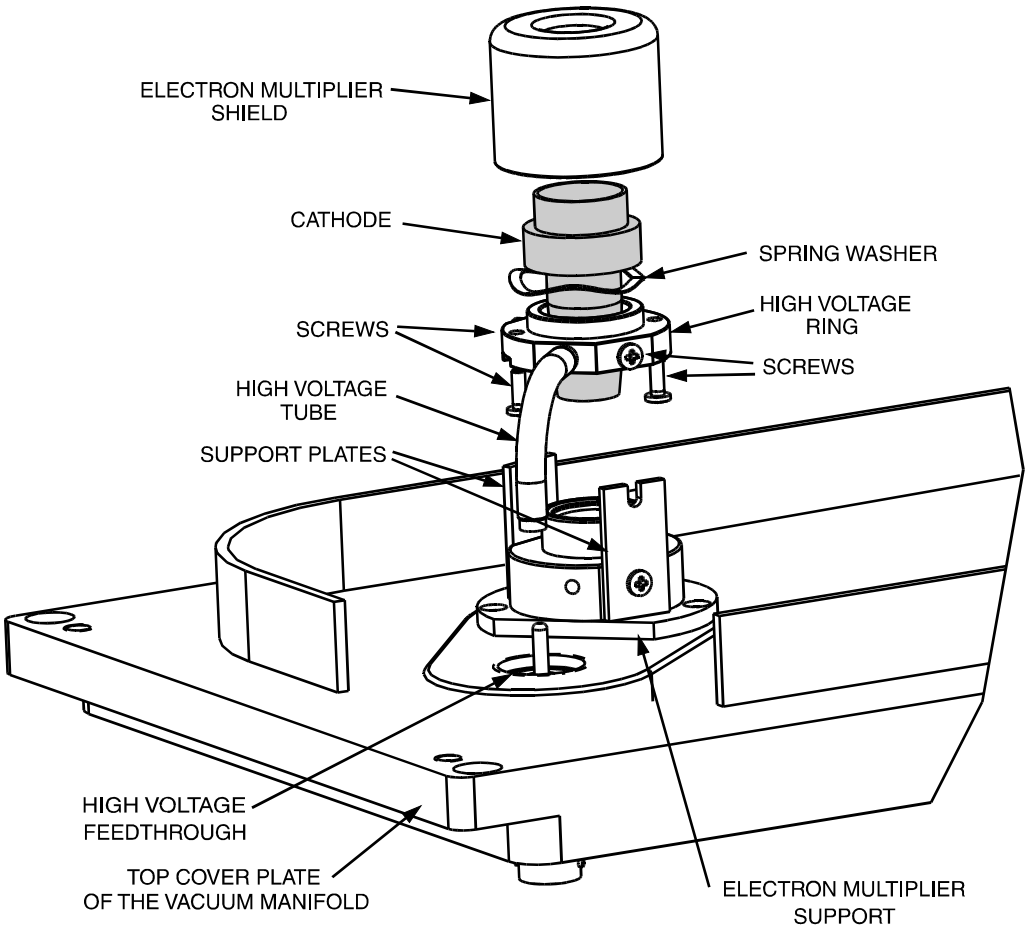

Figure 4-15. Exploded view of the electron multiplier, showing the cathode

11. Reinstall the top cover plate of the vacuum manifold over the opening in the vacuum manifold as described in the topic **Reinstalling the Top Cover Plate of the Vacuum Manifold** on page 4-33.
12. Reinstall the top cover of the MS detector as described in the topic **Reinstalling the Top Cover of the MS Detector** on page 4-34.
13. Start up the LCQ Advantage MAX system as described in the topic **Starting Up the System After a Complete Shutdown in the System Shutdown, Startup, and Reset** chapter.
14. Set the electron multiplier voltage to -800 V as follows:
    a. Choose **Start > Programs > Xcalibur > LCQ Tune** to open the Tune Plus window.

b. From the Tune Plus window, choose **Diagnostics > Diagnostics**.

c. Select the Graphs tab to display the Graphs page.

d. In the Set Device Value option box, select Multiplier (V).

e. In the text box to the right of the Set Device Value option box, enter **-800**.

f. Click on the **Set** button to set the electron multiplier voltage to -800 V.

g. Click on the **OK** button to return to Tune Plus.

15. Calibrate the electron multiplier voltage as follows:

    a. Allow the system to pump down for at least one hour before you turn on the high voltages.

    b. Set up for the infusion of the tuning solution into the MS detector as described in **LCQ Series Getting Started**.

    c. From the Tune Plus window, choose **Control > Calibrate**. The Calibrate dialog box appears.

    d. Click on the Semi-Automatic tab to display the Semi-Automatic page.

    e. Select the Electron Multiplier Gain option. Click on the **Start** button to start the multiplier gain procedure.

16. After the Electron Multiplier Gain program is finished, set up for ESI or APCI operation as described in **LCQ Series Getting Started**.

4.6 Purging the Oil in the Forepump

You need to purge (decontaminate) the oil in the forepump on a daily basis to remove water and other dissolved chemicals from the pump oil. Water and other chemicals in the forepump can cause corrosion and decrease the lifetime of the pump. A good time to purge the oil is at the end of the working day after you flush the API probe, spray shield, and ion transfer capillary.

To purge the oil in the forepump, proceed as follows:

1. Turn off the flow of sample solution from the LC to the MS detector.
2. From the Tune Plus window, choose **Control > Standby** (or click on the On/Standby button) to put the MS detector in Standby.
3. Withdraw the API flange from the spray shield and place a septum over the entrance to the ion transfer capillary.
4. Open the gas ballast valve on the forepump by turning it to position **|**. Refer to the manual that came with the pump for the location of the gas ballast valve.
5. Allow the pump to run for 2 hours with the gas ballast valve open.
6. After 2 hours, close the gas ballast valve by turning it to position O.
7. Top off oil in the forepump reservoir if the level is lower than two-thirds of the maximum level visible in the viewing window.

4.7 Replacing the Oil Reservoir in the Turbomolecular Pump

You need to replace the oil reservoir in the turbomolecular pump at least once a year. Replacing the oil reservoir in the turbomolecular pump involves the following steps:

- Removing the Turbomolecular Pump
- Changing the Turbomolecular Pump Oil Reservoir
- Reinstalling the Turbomolecular Pump

Note. If the turbomolecular pump fails, it must be replaced (P/N 00108-02644). To replace the turbomolecular pump, remove the pump as described in the topic **Removing the Turbomolecular Pump**. Then, install a new pump as described in the topic **Reinstalling the Turbomolecular Pump**.

Removing the Turbomolecular Pump

To remove the turbomolecular pump, proceed as follows:

1. Shut down and vent the system as described in the topic **Shutting Down the System Completely** in the **System Shutdown, Startup, and Reset** chapter. Be sure that the vacuum manifold is completely vented before continuing.
2. Disconnect any sample tubes between the syringe pump and the API source.

CAUTION. Make sure that the LCQ Advantage MAX power cord is unplugged before you proceed.

3. Open the front door of the MS detector by loosening the 1/4-in. Allen screw on the right with an Allen wrench.
4. Loosen the hose clamp and disconnect the vacuum hose from the turbomolecular pump at the foreline union. See Figure 4-16.
5. Disconnect the power cable from the front of the electronics tower.
6. Disconnect the turbomolecular pump communication cable.
7. Unscrew and remove the aluminum plate that is attached to the manifold fascia.

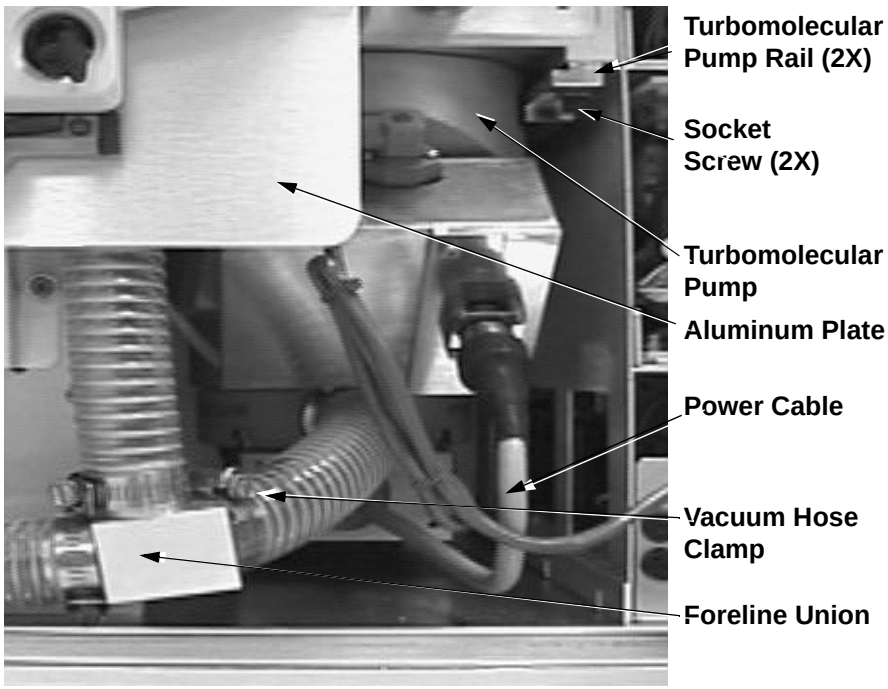

Figure 4-16. Turbomolecular pump

8. Lower the turbomolecular pump by loosening the two socket screws under the rails. You do not need to remove the screws.
9. Pull the turbomolecular pump out on the rails.
10. Remove the turbomolecular pump.

Go on to the next topic: **Changing the Turbomolecular pump Oil Reservoir**.

Changing the Turbomolecular Pump Oil Reservoir

To change the turbomolecular pump oil reservoir, proceed as follows:

CAUTION. Toxic residues from samples are likely to be concentrated in the pump oil. Spent pump oil must be disposed of in accordance with local and federal regulations.

1. Turn the turbomolecular pump upside down on a work bench.
2. Using a large screwdriver, unscrew the locking cap on the bottom of the turbomolecular pump. Remove the locking cap and O-ring.
3. Using a pair of tweezers, remove the oil reservoir from the pump. Dispose of the oil reservoir properly.

4. Place a new oil reservoir (P/N 00950-01117) in the cavity in the bottom of the pump.
5. Check the condition of the Viton O-ring. If it has any nicks or breaks, replace it with a new one.
6. Reinstall the O-ring and locking cap. Tighten the locking cap securely with a large screwdriver.

Go on to the next topic: **Reinstalling the Turbomolecular Pump**.

Reinstalling the Turbomolecular Pump

To reinstall the turbomolecular pump, proceed as follows (see Figure 4-16):

1. Check the condition of the Viton O-rings around the two openings on the bottom of the vacuum manifold. (Use a small flashlight to illuminate the O-rings.) If they have any nicks or breaks, replace them with new ones (P/N 00107-11100).
2. Place the turbomolecular pump on the turbomolecular pump rails.
3. Slide the turbomolecular pump into position under the openings in the vacuum manifold.
4. Carefully tighten the two socket screws that hold the turbomolecular pump rails to the vacuum manifold. Do not overtighten the screws.
5. Reconnect the vacuum hose to the foreline union. Tighten the hose clamp that secures the vacuum hose to the union.
6. Reinstall the aluminum plate.
7. Reconnect the turbomolecular pump power cable.
8. Reconnect the turbomolecular pump communication cable.
9. Reconnect the vacuum hose to the foreline union.
10. Close the front door of MS detector. Tighten the 1/4-in. Allen screw on the right side of the door with an Allen wrench.
11. Reconnect any tubing between the syringe pump and the API source that you disconnected earlier.
12. Restart the system as described in the topic **Starting Up the System After a Complete Shutdown** in the **System Shutdown, Startup, and Reset** chapter.

4.8 Cleaning the Fan Filter

You need to clean the fan filter, located on the rear of the MS detector, every four months. To clean the fan filter, proceed as follows:

1. Remove the fan filter by reaching behind the MS detector and pulling the fan filter out to the right.
2. Wash the fan filter in a solution of soap and water.
3. Rinse the fan filter with tap water.
4. Squeeze the water from the fan filter and allow it to air dry.
5. When the fan filter is completely dry, reinstall it on the rear of the MS detector [or replace it with a new one (P/N 97000-20299)].

Chapter 5
LCQ Deca XP MAX MS Detector Maintenance

LCQ Deca XP MAX performance depends on the maintenance of all parts of the instrument. **It is your responsibility to maintain your system properly by performing the system maintenance procedures on a regular basis**.

This chapter describes routine MS detector maintenance procedures that must be performed to ensure optimum performance of the instrument. Most of the procedures involve cleaning. For example, procedures are provided for cleaning the API source, ion optics, mass analyzer, and ion detection system. Procedures are also presented for replacing the API sample tube, ion transfer capillary, and electron multiplier.

Routine and infrequent MS detector maintenance procedures are listed in Table 5-1.

Table 5-1. MS Detector maintenance procedures

MS Detector Component	Procedure	Frequency	Procedure Location
API source	Flush (clean) sample transfer line, sample tube, and API probe	Daily	page 5-6
API source	Flush (clean) ion transfer capillary	Daily (or as needed*)	page 5-8
API source	Flush (clean) spray shield/spray cone	Daily	page 5-8
Forepump	Purge (decontaminate) oil	Daily (or as needed*)	page 5-45
API source	Clear ion transfer capillary	If ion transfer capillary bore is obstructed	page 5-10
API source	Replace ion transfer capillary	If ion transfer capillary bore is corroded.	page 5-11
API source	Clean API stack (spray shield, ion transfer capillary, tube lens, and skimmer)	As needed*	page 5-17
API source	Replace sample tube	If sample tube is broken or obstructed	Refer to the **Finnigan Ion Max API Source Hardware Manual**.

Table 5-1. MS Detector maintenance procedures, continued

MS Detector Component	Procedure	Frequency	Procedure Location
Ion optics	Clean quadrupole, octapole and interoctapole lens	As needed*	page 5-21
Mass analyzer	Clean mass analyzer	Yearly (or as needed*)	page 5-21
Ion detection system	Clean ion detection system (electron multiplier and conversion dynode)	Whenever the top cover plate of the vacuum manifold is removed	page 5-33
Ion detection system	Replace electron multiplier anode and cathode	If noise in spectrum is excessive or proper electron multiplier gain can not be achieved	page 5-40
Turbomolecular pump	Replace turbomolecular pump	If turbomolecular pump fails	page 5-45
Cooling fans	Clean fan filter	Every 4 months	page 5-48
Forepump	Add oil	If oil level is low	Manufacturer's documentation
Forepump	Change oil	Every 3 months or if oil is cloudy or discolored	Manufacturer's documentation
Fuses	Replace fuse	If fuse has blown	**LCQ Deca XP MAX Diagnostics and PCB and Assembly Replacement** chapter
Electronic modules	Replace electronic module	If electronic module fails	**LCQ Deca XP MAX Diagnostics and PCB and Assembly Replacement** chapter
PCBs	Replace PCB	If PCB fails	**LCQ Deca XP MAX Diagnostics and PCB and Assembly Replacement** chapter
Ion gauge	Replace ion gauge	If ion gauge fails	**LCQ Deca XP MAX Diagnostics and PCB and Assembly Replacement** chapter

*Frequency depends on analytical conditions

For instructions on maintaining LCs or autosamplers, refer to the manual that comes with the LC or autosampler.

This chapter contains the following sections:

- Tools and Supplies
- Frequency of Cleaning
- API Source Maintenance
- Cleaning the Ion Optics and Mass Analyzer
- Replacing the Electron Multiplier
- Purging the Oil in the Forepump
- Cleaning the Fan Filter

Note. The keys to success with the procedures in this chapter are:

Proceed methodically

Always wear clean, lint-free gloves when handling the components of the API source, ion optics, mass analyzer, and ion detection system

Always place the components on a clean, lint-free surface

Always cover the opening in the top of the vacuum manifold with a large, lint-free tissue whenever you remove the top cover plate of the vacuum manifold

Never overtighten a screw or use excessive force

Never insert a test probe (for example, an oscilloscope probe) into the sockets of female cable connectors on PCBs

5.1 Tools and Supplies

The LCQ Deca XP MAX requires very few tools for you to perform routine maintenance procedures. You can remove and disassemble many of the components by hand. The tools, equipment, and chemicals listed in Table 5-2 are needed for the maintenance of the API source, ion optics, mass analyzer, and ion detection system.

Table 5-2. Tools, equipment, and chemicals

Description	Part Number
Wrench, 5/16-in., hex socket (Allen)	
Wrench, 9/16-in., socket	
Wrench, 7/16-in., open end	
Wrench, 9/16-in., open end	
Wrench, 5/16-in., open end	
Wrench, 1/2-in., open end	
Wrench, 3/8-in., open end	
Screwdrivers, set, ball point, Allen (also referred to as ball drivers)	00025-03025
Screwdriver, slot head, large	
Screwdriver, slot head, small	
Screwdriver, Phillips, small	
Fused-silica cutting tool	
Hypodermic tube	00106-20000
Spray bottle	
Beaker, 450 mL	
Gloves, nylon	00301-09700
Kimwipes® or other lint-free industrial tissue	
Applicators (swabs), cotton-tipped	00301-02000
Detergent	
Clean, dry, compressed nitrogen gas	
Distilled water	
Methanol, HPLC grade or better	
Tool, ion transfer capillary	70111-20258

CAUTION. As with all chemicals, solvents and reagents should be stored and handled according to standard safety procedures and should be disposed of according to local and federal regulations.

5.2 Frequency of Cleaning

The frequency of cleaning the components of the MS detector depends on the types and amounts of samples and solvents that are introduced into the instrument. In general, for a given sample and ionization technique, the closer an MS detector component is to the source of the ions, the more rapidly it becomes dirty.

- The sample tube, API probe, ion transfer capillary bore, and spray shield of the API source (including the ion sweep cone and the spray cone) should be cleaned at the end of each operating day to remove any residual salts from buffered mobile phases or other contamination that might have accumulated during normal operation. Refer to the topics **Flushing the Sample Transfer Line, Sample Tube, and API Probe** and **Flushing the Spray Shield, Ion sweep cone, Spray Cone, and Ion Transfer Capillary** on page 5-6 and page 5-8, respectively.
- The tube lens and skimmer of the API source become dirty at a slower rate than the API probe, spray shield, and ion transfer capillary. Refer to the topic **Maintaining the API Stack** on page 5-11.
- The ion optics and the mass analyzer become dirty at a rate significantly slower than the API source. Refer to the topic **Cleaning the Ion Optics and Mass Analyzer** on page 5-28.
- Clean the electron multiplier and conversion dynode whenever you remove the top cover plate of the vacuum manifold by blowing them with a clean, dry gas. Refer to the topic **Cleaning the Ion Detection System** on page 5-28.

When the performance of your system decreases significantly due to contamination, clean the components of the MS detector in the following order:

- Clean the API probe, spray shield, and ion transfer capillary
- Clean the tube lens and skimmer
- Clean the ion optics and mass analyzer

5.3 API Source Maintenance

The API source requires a minimum of maintenance. Periodically, you need to clean the components of the API source to remove salts or other contaminants. The frequency of cleaning the API source depends on the types and amounts of samples and solvents that are introduced into the system.

Maintenance procedures are provided below to do the following:

- Flush the sample transfer line, sample tube, and API probe
- Flush the spray shield and the bore of the ion transfer capillary
- Clear a blocked ion transfer capillary
- Maintain the APCI probe assembly, including replacing the APCI sample tube
- Maintain the ESI probe assembly, including replacing the ESI sample tube
- Maintain the API stack, including replacing the ion transfer capillary

This manual provides maintenance procedures for the APCI probe and the ESI probe. For maintenance procedures for the NSI source, refer to the **LCQ Series Nanospray Ion Source Operator's Manual.**

CAUTION. AVOID EXPOSURE TO POTENTIALLY HARMFUL MATERIALS. Always wear protective gloves and safety glasses when you use solvents or corrosives. Also, contain waste streams and use proper ventilation. Refer to your supplier's Material Safety Data Sheets (MSDS) for procedures that describe how to handle a particular solvent.

Flushing the Sample Transfer Line, Sample Tube, and API Probe

You should flush the sample transfer line, sample tube, and API probe at the end of each working day (or more often if you suspect they are contaminated) by flowing a 50:50 methanol / distilled water solution from the LC through the API source.

To flush the sample transfer line, sample tube, and API probe, proceed as follows:

1. Make sure that the API flange is secured to the spray shield by the two flange retainer bolts.
2. Choose **Start > Programs > Xcalibur > LCQ Tune** to open the Tune Plus window.

3. From the Tune Plus window, choose **Control > On** (or click on the On/Standby button) to turn on the voltages and gas flows to the API source.
   - If you are operating in APCI mode, go to step 4.
   - If you are operating in ESI mode, go to step 5.
4. Set up the APCI source as follows:
   a. Ensure that the auxiliary gas line is connected to the A port on the APCI probe.
   b. In the Tune Plus window, choose **Setup > APCI Source** (or click on the APCI Source button). The APCI Source dialog box appears.
   c. In the APCI Source dialog box, use the Vaporizer Temp spin box to set the vaporizer temperature to 500 °C.
   d. Use the Sheath Gas Flow Rate spin box to set the sheath gas flow rate to 80 units.
   e. Use the Aux Flow Rate spin box to set the auxiliary gas flow rate to 10 units.
   f. Use the Discharge Current spin box to set the discharge current to 0 µA.
   g. Click on **OK** to set the APCI parameters and close the dialog box.

Go to step 6.

5. Set up the ESI source as follows:
   a. Ensure that the auxiliary gas line is connected to the Aux port on the ESI probe.
   b. In the Tune Plus window, choose **Setup > ESI Source** (or click on the ESI Source button). The ESI Source dialog box appears.
   c. Use the Sheath Gas Flow Rate spin box to set the sheath gas flow rate to 80 units.
   d. Use the Aux Flow Rate spin box to set the auxiliary gas flow rate to 10 units.
   e. Use the Spray Voltage spin box to set the spray voltage to 0 kV.
   f. Click on **OK** to set the ESI parameters and close the dialog box.
6. Set up and start a flow of 50:50 methanol / water solution from the LC to the API source, as follows:
   a. In the Tune Plus window, choose **Setup > Direct Inlet Control** (or click on the LC pump button). The Inlet Direct Control dialog box appears.
   b. Select the LC tab.

c. In the Inlet Direct Control dialog box, set the Flow Rate to a value that is typical for your experiments.

d. In the Inlet Direct Control dialog box, set the % spin boxes to 50% methanol and water.

e. Click on **Start** to start the LC pump.

7. Let the solution flow through the sample transfer line, sample tube, and API probe for 15 min. After 15 min, turn off the flow of liquid from the LC to the API source, as follows. Leave the API source (including the APCI vaporizer, sheath gas, and auxiliary gas) on for an additional 5 min.

   a. In the Tune Plus window, click on the LC pump button. The Inlet Direct Control dialog box appears.

   b. Select the LC tab.

   c. Click on **Stop** to stop the LC pump.

8. After 5 min, turn off the API source by placing the MS detector in Standby: From the Tune Plus window, choose **Control > Standby** (or click on the On/Standby button).

Go on to the next topic: **Flushing the Spray Shield and the Ion Transfer Capillary**.

Flushing the Spray Shield, Ion Sweep Cone, Spray Cone, and Ion Transfer Capillary

You need to clean the spray shield, ion sweep cone, spray cone, and ion transfer capillary on a regular basis to prevent excessive contamination and to maintain optimum performance of your API source. A good practice is to flush the spray shield, ion sweep cone, spray cone, and ion transfer capillary at the end of each operating day after you flush the sample transfer line, sample tube, and API probe with a 50:50 methanol / water solution from the LC. (Refer to the topic **Flushing the Sample Transfer Line, Sample Tube, and API Probe** on page 5-6.) If you are operating the system with nonvolatile buffers in your solvent system or with high concentrations of sample, you might need to clean the spray shield, ion sweep cone, spray cone, and ion transfer capillary more often.

You do not need to vent the system to flush the spray shield, ion sweep cone, spray cone, and ion transfer capillary.

To clean the spray shield, ion sweep cone, spray cone, and the ion transfer capillary, do the following:

1. Turn off the flow of liquid from the LC (or other sample introduction device) to the API source. To turn off the flow of liquid from the LC to the API source, do the following:

a. Choose **Start > Programs > Xcalibur > LCQ Tune** to open the Tune Plus window.

b. In the Tune Plus window, choose **Setup > Direct Inlet Control** (or click on the LC pump button). The Inlet Direct Control dialog box appears.

c. Select the LC tab and click on **Stop** to stop the LC pump.

2. From the Tune Plus window, choose **Control > Standby** (or click on the On/Standby button) to put the MS detector in Standby. If you are using the APCI Source, click on the APCI Source button. Then, in the APCI Source dialog box, use the Vaporizer Temp spin box to set the vaporizer temperature to 0 °C. For either APCI or ESI, turn the heat to the ion transfer capillary heater off.

3. Loosen the two flange retainer bolts that secure the API flange (APCI or ESI flange) to the spray shield.

4. Pull back the API flange from the spray shield.

CAUTION. AVOID BURNS. At operating temperatures, the APCI vaporizer, ion sweep cone, spray cone, and ion transfer capillary can severely burn you! The APCI vaporizer typically operates at 400 to 600 °C and the ion sweep cone, spray cone, and ion transfer capillary typically operate at 100 to 300 °C. Allow the heated vaporizer, ion sweep cone, spray cone, and ion transfer capillary to cool to room temperature, for approximately 20 min, before you touch or remove these components.

5. Pull the ion sweep cone off of the spray cone, and place it on a large Kimwipe (or other lint-free tissue). Temporarily place another large Kimwipe on the bottom of the spray shield. (This Kimwipe is required to absorb the solution used to flush the spray cone, ion transfer capillary, and spray shield.)

6. Fill a spray bottle with a 50:50 solution of HPLC-grade methanol / distilled water. Spray approximately 5 mL of the solution at the opening of the ion transfer capillary. Do not touch the ion transfer capillary with the tip of the spray bottle.

7. Use the spray bottle filled with the 50:50 solution of HPLC-grade methanol / distilled water to flush contaminants from the accessible surfaces of the spray shield and the spray cone.

8. Remove the Kimwipe you used to absorb the solution. Swab the surface of the spray shield and spray cone with a dry Kimwipe.

9. Ensure that you have removed any salt or other contaminants that may have been deposited on the spray shield or spray cone.

10. If you are operating in the ESI mode, wipe off the ESI nozzle with a Kimwipe soaked with the 50:50 HPLC-grade methanol / water solution.

11. Use the spray bottle filled with the 50:50 solution of HPLC-grade methanol / distilled water to flush contaminants from the interior and exterior surface of the ion sweep cone. Then swab the surface of the ion sweep cone with a dry Kimwipe.

> **Note.** If you are finished operating your LCQ Deca XP MAX for the day, cap the ion transfer capillary with the septum. Leave the API flange withdrawn from the spray shield. Purge the oil in the forepump as described in the topic **Purging the Oil in the Forepump** on page 5-45.

Clearing the Bore of the Ion Transfer Capillary

A stainless steel hypodermic tube has been included in your accessory kit for clearing the ion transfer capillary in the unlikely event it should become blocked. However, since the ion transfer capillary can be easily removed and replaced without loss of vacuum, and you might want to replace the ion transfer capillary instead of cleaning the ion transfer capillary.

If the pressure in the API region (as measured by the Convectron® gauge) drops considerably below 1 Torr, you should suspect a blocked ion transfer capillary. (You can check the Convectron gauge pressure in the Vacuum dialog box by choosing **Setup > Vacuum** from the Tune Plus window.)

You do not have to vent the system to clear the bore of the ion transfer capillary. To clear the bore of the ion transfer capillary, do the following:

1. Turn off the flow of liquid from the LC (or other sample introduction device) to the API source. To turn off the flow of liquid from the LC to the API source, do the following:
   a. Choose **Start > Programs > Xcalibur > LCQ Tune** to open the Tune Plus window.
   b. In the Tune Plus window, choose **Setup > Direct Inlet Control** (or click on the LC pump button). The Inlet Direct Control dialog box appears.
   c. Select the LC tab and click on **Stop** to stop the LC pump.
2. Loosen the two flange retainer bolts that secure the API flange (APCI or ESI) to the spray shield.
3. Pull back the API flange from the spray shield.

> **CAUTION.** The APCI vaporizer typically operates at 400 to 600 °C and the ion sweep cone, spray cone, and ion transfer capillary typically operate at 100 to 300 °C. Allow these components to come to ambient temperature before proceeding.

4. Clear the bore of the ion transfer capillary by inserting and withdrawing the 28 gauge, 10-in hypodermic tube (P/N 00106-20000) included in your accessory kit.
5. Fill a spray bottle with a 50:50 solution of HPLC-grade methanol / distilled water. From a distance of 10 cm from the entrance end of the ion transfer capillary, spray a small amount of the solution down the bore of the ion transfer capillary.
6. Repeat steps 5 and 6 several times.

> **Note.** If you have unblocked the ion transfer capillary, the Convectron gauge pressure should increase to a normal value (approximately 1 Torr). If you can not clear the ion transfer capillary by this method, use the instructions for removing the ion transfer capillary from the spray shield in the topic **Maintaining the API Stack** on page 5-11. Then, if you wish, try clearing the ion transfer capillary from the exit end by the same method. Otherwise, replace the ion transfer capillary with a new one.

7. Push the API flange assembly against the spray shield.
8. Secure the API flange to the spray shield with the two flange retainer bolts.

Maintaining the API Stack

The API stackincludes the spray shield, ion sweep cone, spray cone, ion transfer capillary, capillary lens and skimmer mount, and the tube lens, and skimmer. The ion transfer capillary has a finite lifetime. You need to replace the ion transfer capillary if the ion transfer capillary bore becomes corroded or damaged. You also need to clean the spray shield, ion sweep cone, spray cone, ion transfer capillary, tube lens, skimmer, and the other components of the API stack on a periodic basis.

It is not necessary to vent the system in order to replace the ion transfer capillary. To replace the ion transfer capillary, proceed as follows:

1. Turn off the flow of liquid from the LC (or other sample introduction device) to the API source. To turn off the flow of liquid from the LC to the API source, do the following:
   a. Choose **Start > Programs > Xcalibur > LCQ Tune** to open the Tune Plus window.
   b. In the Tune Plus window, choose **Setup > Direct Inlet Control** (or click on the LC pump button). The Inlet Direct Control dialog box appears.
   c. Select the LC tab and click on **Stop** to stop the LC pump.

2. Place the electronics service switch (located on the right side of the MS detector) in the Service position to turn off the non-vacuum system voltages.

CAUTION. Make sure that the LCQ Deca XP MAX electronics service switch is in the Service position before you proceed.

3. Loosen the two flange retainer bolts that secure the API flange (APCI or ESI) to the spray shield.
4. Pull back and remove the API probe flange from the spray shield.

CAUTION. The APCI vaporizer typically operates at 400 to 600 °C and the ion sweep cone, spray cone, and ion transfer capillary typically operate at 100 to 300 °C. Allow these components to come to ambient temperature before proceeding.

5. Remove the ion sweep cone from the spray cone.
6. Using the ion transfer capillary tool, (P/N 70111-20258) unscrew the ion transfer capillary from the spray cone.
7. Using the ion transfer capillary tool, hook the ion transfer capillary and remove it. Replace the Kalrez O-ring (P/N 00107-12750) if necessary.
8. Screw the new ion transfer capillary into the spray cone.
9. Install and bolt the API probe flange to the spray shield.
10. Place the electronics service switch in the Normal position.
11. Begin operation using the LC or other sample introduction device.

To replace or to clean the spray shield, tube lens and skimmer mount, tube lens, skimmer, or other API components, do the following, as described in this topic:

- Shut down and vent the system
- Remove the API stack
- Disassemble the API stack
- Clean the API stack components
- Reassemble the API stack
- Reinstall the API stack
- Start up the system

Note. You should flush the spray shield, ion sweep cone, spray cone and the bore of the ion transfer capillary at the end of each working day with a 50:50 methanol / water solution. Refer to the topic **Flushing the Spray Shield, Ion sweep cone, Spray Cone, and Ion Transfer Capillary** on page 5-8.

Shutting Down the System

Shut down and vent the system as described in the topic **Shutting Down the System Completely** in the **System Shutdown, Startup, and Reset** chapter.

Go on to the next topic: **Removing the API Stack**.

Removing the API Stack

To remove the API stack proceed as follows:

CAUTION. Make sure that the LCQ Deca XP MAX power cord is unplugged before you proceed.

1. Loosen the two flange retainer bolts that secure the API probe assembly to the spray shield.
2. Pull back the API probe assembly from the spray shield.
3. Disconnect the waste line from the spray shield.
4. Disconnect the API stack electrical cable from the spray shield by turning the tab on the end of the cable counterclockwise (toward you) and then pulling the cable free.
5. Grasp the spray shield with both hands and carefully pull it and the API stack free from the vacuum manifold. Place the API stack on a clean surface with the spray shield down. Allow the API stack to cool to ambient temperature before you disassemble the API stack.

Note. If you are unable to dislodge the spray shield from the vacuum manifold, reattach the API flange to the spray shield and then pull the flange away from the vacuum manifold.

The API stack is shown in Figure 5-1.

Go on to the next topic: **Disassembling the API Stack.**

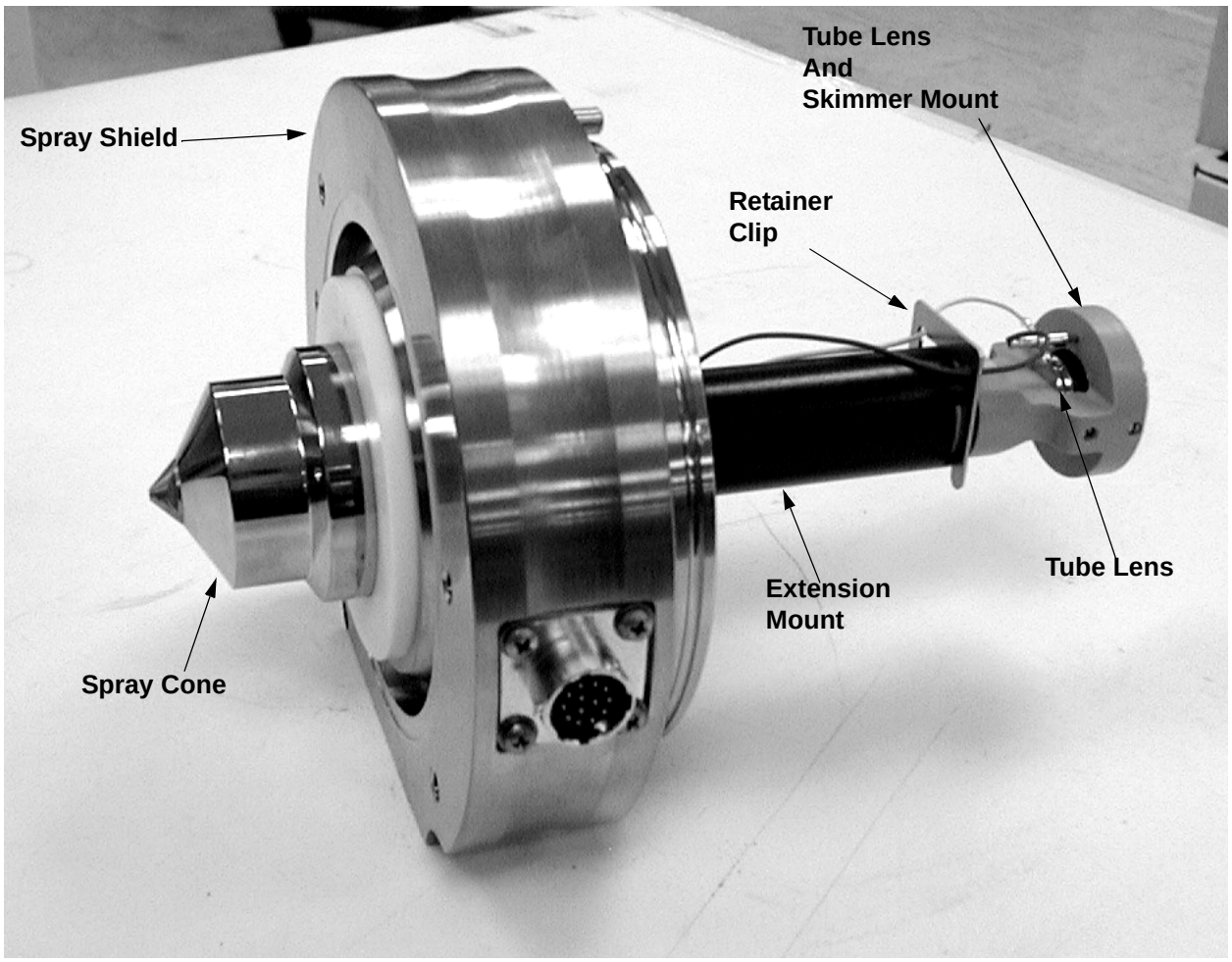

Figure 5-1. API stack

Disassembling the API Stack

Wait for the API stack to cool to ambient temperature before you disassemble it. Refer to Figure 5-1 and Figure 5-2 for the location of the various API stack components.

To disassemble the API stack proceed as follows:

> **Note.** Wear clean, lint-free, nylon or cotton gloves when you handle the API stack components.

1. Disconnect waste fitting so that API stack can easily be set on a flat surface.
2. Remove ion sweep cone.
3. Remove ion transfer capillary. (Refer to **Maintaining the API Stack**)

4. Disconnect the skimmer electrical lead from the lead pin on the skimmer.
5. Disconnect the tube lens electrical lead from the lead pin on the tube lens.
6. Push the tube lens and skimmer mount into the extension mount and remove the retaining clip. Allow the tube lens and skimmer mount to move back slowly.

> **Caution.** The tube lens and skimmer mount is spring loaded. Ensure that the spring (P/N 00201-11599) that is compressed in the extension mount does not fly free when the tube lens and skimmer mount is removed.

7. Detach the skimmer from the tube lens and skimmer mount by pushing on its lead pin.
8. Detach the tube lens from the tube lens and skimmer mount by pushing the tube lens away from the mount.
9. Pull the extension mount from the spray shield
10. Disconnect the heater cable connector for the heater.
11. Loosen the two thumb nuts on the spray shield and remove the heater and the graphite seal.

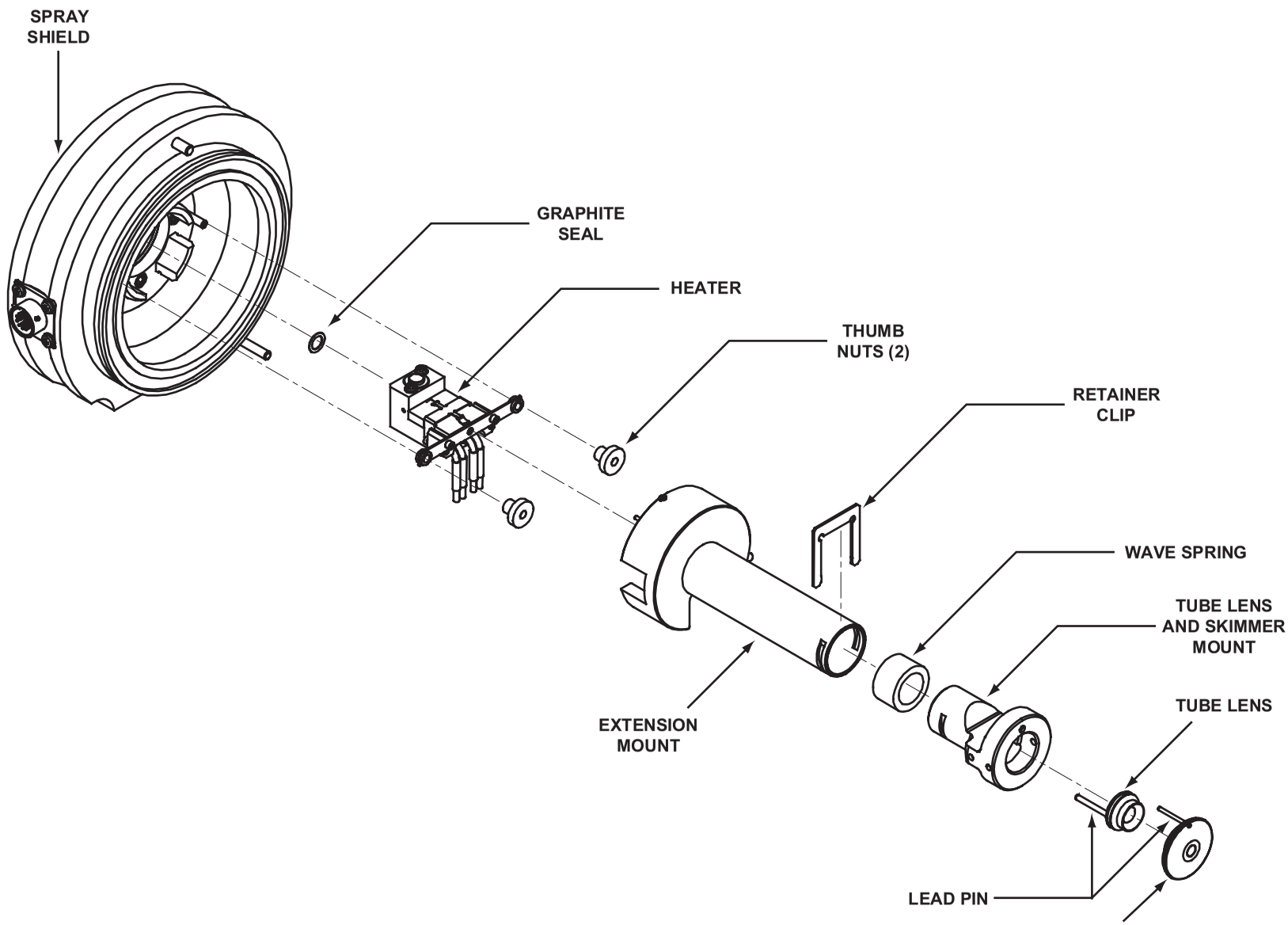

Figure 5-2. Exploded view of the back of the API stack

Cleaning the API Stack Components

Inspect the API stack components for contamination that results from routine use. If dirty, clean the API stack components as follows.

CAUTION. The APCI vaporizer typically operates at 400 to 600 °C and the ion sweep cone, spray cone, and ion transfer capillary typically operate at 100 to 300 °C. Allow these components to come to ambient temperature before proceeding.

Note. Solvents required for cleaning the API stack components: For most cleaning applications, HPLC grade methanol is the solvent of choice. However, use of buffers or salt solutions may require that you use an acidic, aqueous solution. If you need to use a solvent other than methanol, after cleaning the ion source components, flush the component with water and then flush it with methanol as a final wash. In all cases, ensure that all solvent has evaporated from the component(s) before reassembly.

Cleaning the Tube Lens

Clean the inner bore of the tube lens with HPLC-grade methanol and a cotton-tipped applicator (swab).

Cleaning the Skimmer

Look at the tip of the cone on the skimmer for a region that shows discoloration due to contamination. (The off-axis pattern that you see is a result of the sample/solvent that exits from the off-axis ion transfer capillary.) Use methanol and a cotton-tipped applicator or Kimwipe to clean the entrance and exit sides of the skimmer.

Cleaning the Ion Transfer Capillary

The ion transfer capillary is easily replaceable without venting the LCQ Deca XP MAX, however, if you wish to clean the ion transfer capillary, do the following:

1. Use methanol and a Kimwipe to clean the entrance end, exit end, and exterior of the ion transfer capillary.
2. Clear the bore of the ion transfer capillary by inserting and withdrawing the 28 gauge, 10-in. hypodermic tube (P/N 00106-20000) included in your accessory kit.
3. Flush the bore of the ion transfer capillary with methanol.
4. Dry the bore of the ion transfer capillary with nitrogen gas.

5. Ensure that no residue or fibers remain at the exit end of the ion transfer capillary. Fibers in this area may become charged and interfere with the normal flow of ions.

Cleaning the Spray Shield and Spray Shield Cone

To clean the spray shield and spray shield cone, wipe the inside and outside of the spray shield and spray shield cone with methanol and a Kimwipe.

Go on to the next topic: **Reassembling the API Stack**.

Reassembling the API Stack

To reassemble the API stack, proceed as follows. Refer to Figure 5-1 and Figure 5-2 for the location of the API stack components.

1. It is recommended that you replace the graphite seal (P/N 7011-20216)
2. Seat the heater in the spray shield and secure with the two thumb nuts.
3. Reconnect the heater cable to the connector that is held by the spray shield. Turn the locking ring on the cable clockwise to lock the cable.
4. Insert the extension mount.
5. Reinstall the wave spring, tube lens and skimmer mount into the extension mount and use the retaining clip to hold it in place.
6. Align the guide pin on the tube lens with the guide pin hole on the tube lens and skimmer mount. Reinstall the tube lens by inserting it into the tube lens and skimmer mount.
7. Align the lead pin on the skimmer with the lead pin hole on the tube lens and skimmer mount. Reinstall the skimmer by inserting it into the tube lens and skimmer mount.
8. Reconnect the tube lens lead to the lead pin on the tube lens. Use needlenose pliers if necessary.
9. Reconnect the skimmer lead to the lead pin on the skimmer. Use needlenose pliers if necessary.
10. Inspect the API stack. Ensure that the 3.85-in. ID O-ring (P/N 00107-14100) has no cracks, is otherwise in good condition, and is properly seated on the spray shield. Ensure that all components fit together tightly.
11. Reinstall the ion transfer capillary. See Figure 5-3. Replace the Kalrez O-ring (P/N 00107-12750) if necessary. Refer to the topic **Maintaining the API Stack** on page 5-11.
12. Reinstall the ion sweep cone (if being used).

Go on to the next topic: **Reinstalling the API Stack.**

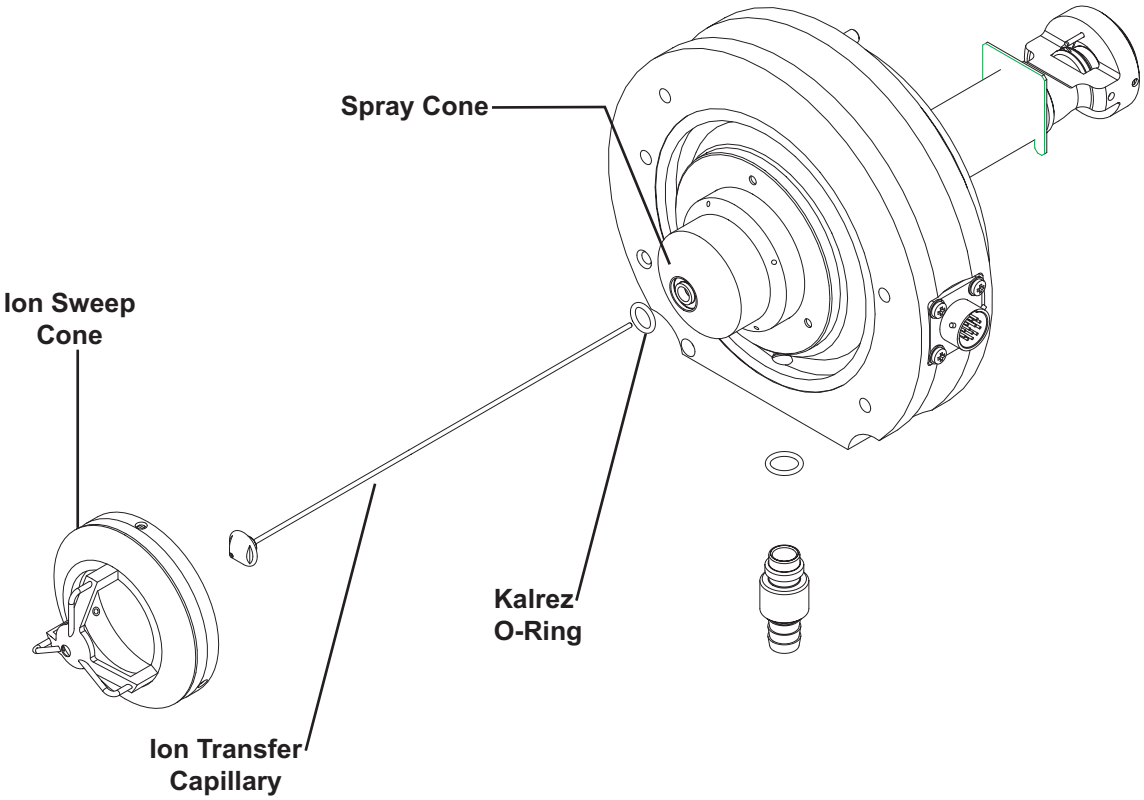

Figure 5-3. Exploded view of the front of the API stack

Reinstalling the API Stack

To reinstall the API stack, proceed as follows:

1. Align the API stack with the opening in the front of the vacuum manifold. Turn the API stack until the guide pin on the spray shield is aligned with the guide pin hole in the vacuum manifold.
2. Carefully insert the API stack into the opening in the vacuum manifold until it seats in the vacuum manifold.
3. Reconnect the API stack cable to the connector on the spray shield. Turn the tab on the end of the cable clockwise (away from you) to secure the cable.
4. Reconnect the waste line to the spray shield.

Go on to the next topic: **Starting Up the System**.

Starting Up the System

Start up the system as described in the topic **Starting Up the System After a Complete Shutdown** in the **System Shutdown, Startup, and Reset** chapter.

5.4 Cleaning the Ion Optics and Mass Analyzer

An accumulation of chemicals on the surfaces of the ion optics and mass analyzer forms an insulating layer that can modify the electrical fields that control ion transmission and mass analysis. Therefore, clean ion optics and mass analyzer are essential for the proper operation of the instrument. The ion optics and mass analyzer require cleaning less often than the API source. The frequency of cleaning depends on the type and quantity of the compounds that you analyze.

Cleaning the ion optics and mass analyzer involves the following steps:

- Shut down and vent the system
- Remove the top cover of the MS detector
- Remover the top cover plate of the vacuum manifold
- Remove the ion optics and mass analyzer
- Disassemble the ion optics and mass analyzer
- Clean the ion optics and mass analyzer parts
- Reassemble the ion optics and mass analyzer
- Reinstall the ion optics and mass analyzer
- Reinstall the top cover plate of the vacuum manifold
- Reinstall the top cover of the MS detector
- Start up the system
- Tune the ring electrode and octapole RF voltages

Shutting Down the System

Shut down and vent the system as described in the topic **Shutting Down the System Completely** on page 6-5 in the **System Shutdown, Startup, and Reset** chapter.

CAUTION. Make sure that the LCQ Deca XP MAX power cord is unplugged before you proceed.

Go on to the next topic: **Removing the Top Cover of the MS Detector**.

Removing the Top Cover of the MS Detector

Remove the top cover of the MS detector as follows:

1. Open the left and right front doors of the MS detector by loosening the 1/4-in. Allen screw on the right front door with an Allen wrench. Be careful not to damage any fused silica tubing leading to the API source.
2. Open the two fasteners that hold the top cover to the MS detector chassis. The fasteners are located in the upper right and left corners of the chassis.
3. With one hand under the center of the top cover, lift the top cover up and away from the MS detector.

Go on to the next topic: **Removing the Top Cover Plate of the Vacuum Manifold**.

Removing the Top Cover Plate of the Vacuum Manifold

You need to remove the top cover plate of the vacuum manifold to access the ion optics, mass analyzer, and ion detection system. The top cover plate is held in place by gravity and by the air pressure differential between the vacuum manifold and atmospheric pressure. Six cables and one gas line are connected to the top cover plate. See Figure 5-4.

To remove the top cover plate, proceed as follows:

1. Disconnect (at ANAL. AUX 1 IN) the octapoles cable that comes from the Analyzer Auxiliary PCB.
2. Disconnect (at ANALYZER) the lenses cable that comes from the System Control PCB.
3. Disconnect (at ANAL. AUX 2 IN and ANAL. AUX 3 IN) the two endcap electrode cables that come from the Analyzer Auxiliary PCB.
4. Disconnect (at ACQU/DSP) the electrometer cable. (If necessary, use a small screw driver to loosen the screws that secure the cable.)
5. Disconnect (at MULT) the electron multiplier high voltage cable that comes from the electron multiplier power supply.
6. Use a 7/16-in. open-end wrench to disconnect the helium damping gas line from the fitting.
7. Carefully lift the top cover plate straight up by its two handles. Take care not to damage the components on the underside of the cover plate. Place the cover plate upside down (supported on its handles) on a flat surface.
8. Cover the opening in the top of the vacuum manifold with a large, lint-free tissue.

Go on to the next topic: **Removing the Ion Optics and Mass Analyzer**.

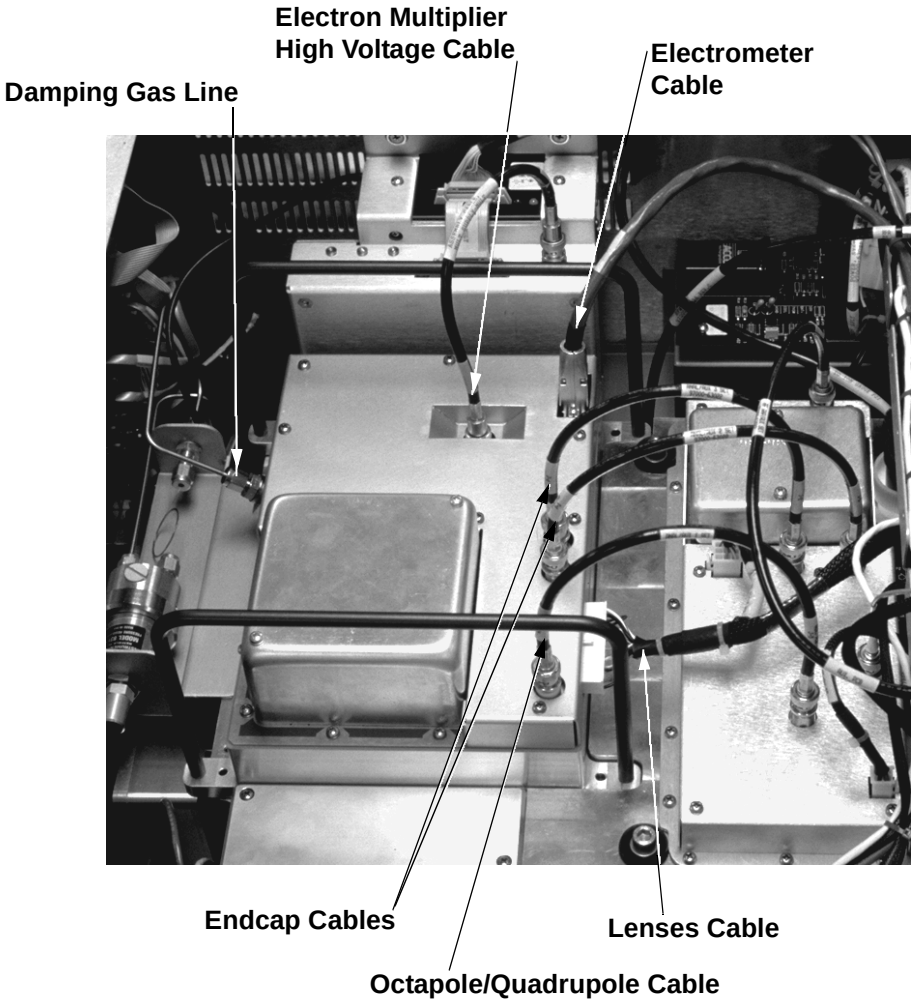

Figure 5-4. Electrical connections and damping gas line connection to the top cover plate of the vacuum manifold

Removing the Ion Optics and Mass Analyzer

The ion optics and mass analyzer are mounted on a baffle on the underside of the top cover plate of the vacuum manifold. See Figure 5-5.

Use the following procedure to remove the ion optics and mass analyzer from the top cover plate. See Figure 5-6 and Figure 5-7 for the location of the ion optics and mass analyzer components.

> **Note.** Wear clean, lint-free, nylon or cotton gloves when you handle the ion optics and mass analyzer components.

1. Prepare a clean work area by covering the area with lint-free paper. Place each part on the paper as you remove it.
2. Disconnect the four electrical leads to the quadrupole.
3. Hold the quadrupole mount with one hand; loosen and remove the two thumb screws that hold the quadrupole mount to the baffle on the top cover plate of the vacuum manifold.
4. Remove the quadrupole and quadrupole mount.

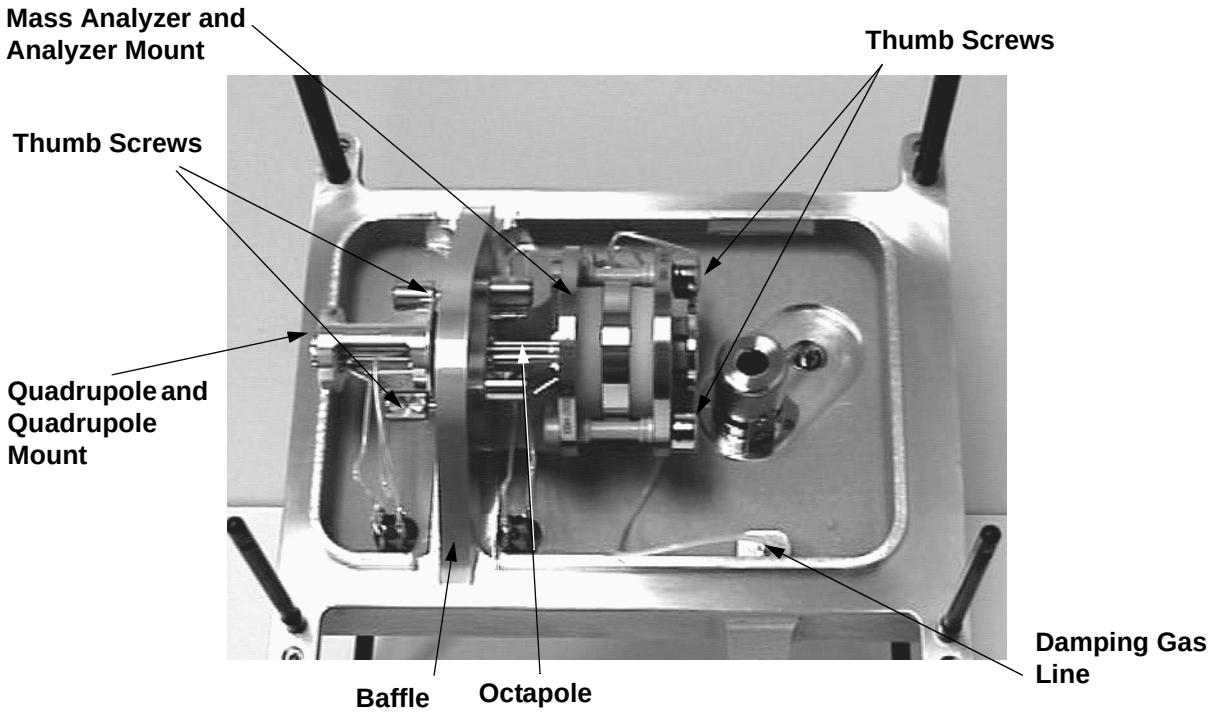

Figure 5-5. Mass analyzer and ion optics, mounted to the baffle on the top cover plate of the vacuum manifold

5. Disconnect the electrical lead to the interoctapole lens. Remove the interoctapole lens.
6. Disconnect the electrical leads to the octapole and to the entrance lens, entrance endcap electrode, exit endcap electrode, and the exit lens of the mass analyzer.
7. Disconnect the damping gas line from the nipple on the exit endcap electrode by pulling the line free from the nipple. See Figure 5-7
8. Hold the mass analyzer with one hand; loosen the two thumb screws that hold the analyzer mount to the baffle.
9. With one hand holding the mass analyzer and the other hand holding the analyzer mount, lift the mass analyzer, octapole, and analyzer mount out

and away from the baffle on the top cover plate. Be careful not to touch the electron multiplier with the mass analyzer. This could damage the electropolished surface.

Go on to the next topic: **Disassembling the Ion Optics and Mass Analyzer**.

Disassembling the Ion Optics and Mass Analyzer

To disassemble the ion optics and mass analyzer, proceed as follows. See Figure 5-6 and Figure 5-7 for the location of the ion optics and mass analyzer components.

1. Remove the quadrupole from the quadrupole mount.
2. Remove the octapole from the analyzer mount.
3. Disassemble the mass analyzer, as follows:
   a. Remove the entrance lens by pulling the entrance lens out of the entrance lens sleeve.
   b. Remove the entrance lens sleeve by squeezing the sleeve and pulling it out of the recess in the entrance endcap electrode.
   c. Remove the exit lens by pulling the exit lens out of the exit lens sleeve. Use the connector pin to aid you pull off the lens.
   d. Remove the exit lens sleeve by squeezing the sleeve and pulling it out of the recess in the exit endcap electrode.
   e. Unscrew and remove the two analyzer nuts from the analyzer posts.
   f. Remove the two spring washers from the analyzer posts.
   g. Remove the exit endcap electrode from the analyzer posts.
   h. Remove the two quartz spacer rings and the ring electrode.
   i. Remove the entrance endcap electrode from the posts.
   j. Unscrew and remove the two posts from the analyzer mount.

Go on to the next topic: **Cleaning the Ion Optics and Mass Analyzer Parts**.

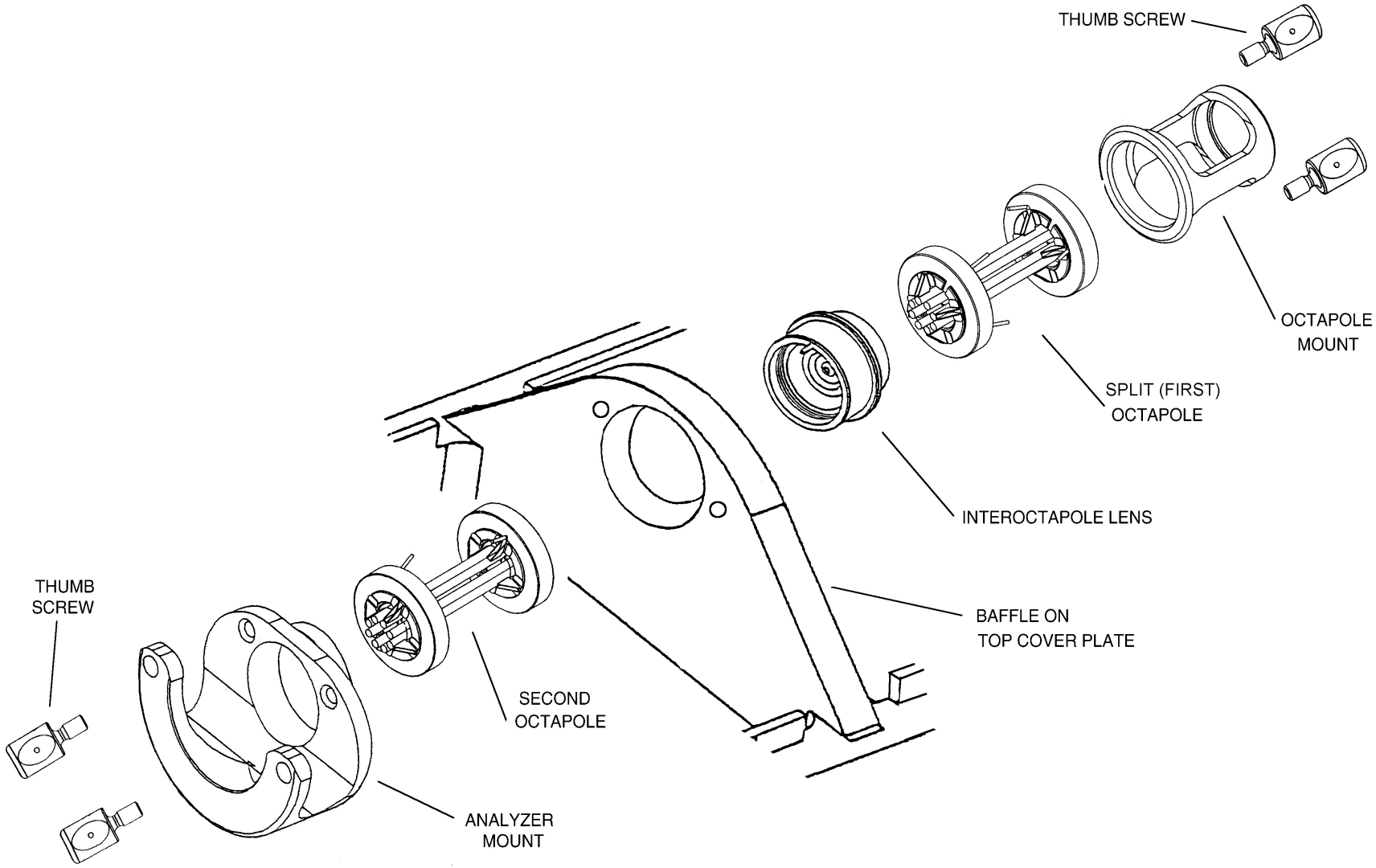

Figure 5-6. Exploded view of the ion optics

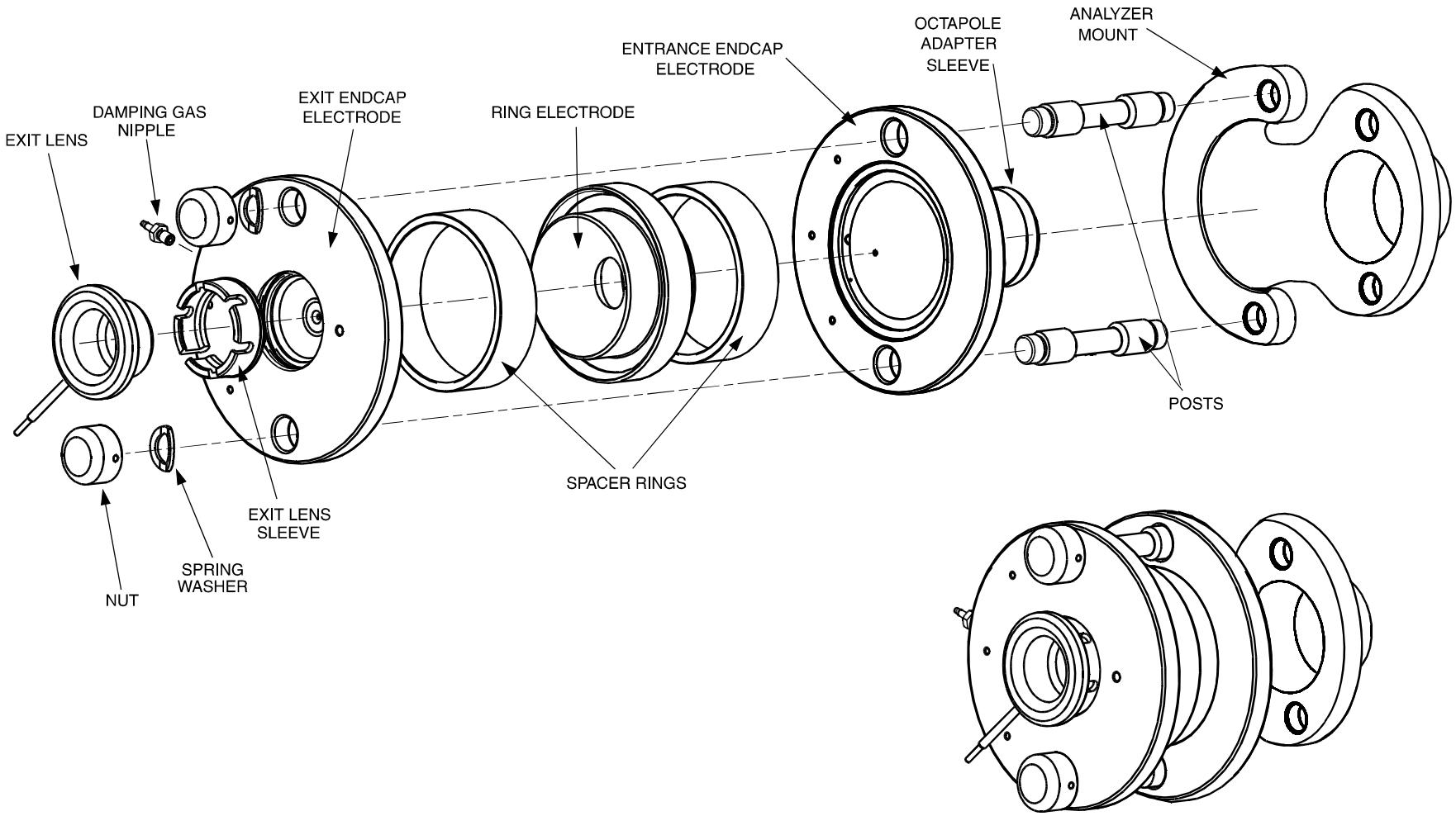

Figure 5-7. Exploded and assembled views of the mass analyzer

Cleaning the Ion Optics and Mass Analyzer Parts

Use the following procedure to remove contamination from the ion optics and mass analyzer parts. Clean each part in turn. After cleaning, place each part on a clean, lint free surface.

Caution. Take care not to chip, scratch, or break the spacer rings of the mass analyzer. Take care not to bump or jar the octapoles. Do not place the octapoles in an ultrasonic cleaner.

Note. When you clean the ion optics and mass analyzer parts, pay particular attention to the inside surfaces.

1. With a soft tooth brush or lint-free swab, scrub the ion optics or mass analyzer part with a solution of detergent and water.
2. Rinse the part with tap water to remove the detergent.
3. Rinse the part with distilled water.
4. Place the part in a tall beaker and immerse it completely in HPLC-grade methanol. Move the part up and down in the methanol for 15 s.

Note. Wear clean, lint-free, nylon or cotton gloves to handle the parts after you clean them in methanol.

5. Remove the part from the methanol bath; then rinse it thoroughly with fresh methanol.
6. Dry the part with a rapid stream of nitrogen gas.
7. Inspect each part for contamination and dust. If necessary, repeat the cleaning procedure.

After all ion optics and mass analyzer parts are clean and dry, go on to the next topic: **Reassembling the Ion Optics and Mass Analyzer**.

Reassembling the Ion Optics and Mass Analyzer

Use the following procedure to reassemble the ion optics and mass analyzer. See Figure 5-6 and Figure 5-7.

> **Note.** Wear clean, lint-free, nylon or cotton gloves when you handle components of the mass analyzer.

1. Reinstall the analyzer posts by screwing them by hand into the analyzer mount. (Both ends are the same.)
2. Reinstall the entrance endcap electrode onto the analyzer posts. (The entrance endcap electrode is the one without the damping gas nipple.) Ensure that the electrode is oriented such that the convex surface faces away from the analyzer mount. Also, the opening in which the pin on the end of the electrical lead inserts should be close to the top cover plate when the analyzer mount is installed on the top cover plate.

> **Caution.** Handle the spacer rings carefully. Do not scrape the spacer rings against any metal surfaces. Metal deposits on the surfaces of the spacer rings might cause the RF voltage to arc across the spacer rings to the endcaps. Do not overtighten the mass analyzer nuts.

3. Place a quartz spacer ring into the groove in the entrance endcap electrode.
4. Reinstall the ring electrode onto the quartz spacer ring so that the spacer ring is held securely between the electrodes. The orientation of the ring electrode is unimportant.
5. Reinstall the second quartz spacer ring into the groove in the ring electrode.
6. Reinstall the exit endcap electrode (the one with the damping gas nipple) on the analyzer posts such that the quartz spacer ring is held in place between the ring electrode and the exit endcap electrode. Make sure that the electrode is oriented such that the convex surface faces the spacer ring. Also, the damping gas nipple should point toward the top cover plate when the analyzer mount is installed on the top cover plate.
7. Inspect the mass analyzer assembly. Ensure that all the parts are aligned properly and that they all fit together snugly.
8. Reinstall the spring washers on the analyzer posts such that the convex side of the washer is toward the exit endcap electrode.
9. Reinstall the analyzer nuts onto the analyzer posts and tighten the nuts by hand until they are finger tight. Do not overtighten the nuts.

10. Squeeze the exit lens sleeve and insert it into the recess in the exit endcap electrode. See Figure 5-7 on page 5-27 for the proper orientation of the exit lens sleeve.
11. Insert the exit lens into the exit lens sleeve such that the lead pin on the exit lens points in the same direction as the 8-pin feedthrough when the analyzer mount is installed on the top cover plate. Make sure that the exit lens lead pin does not contact the nut on the end of the mass analyzer post.

Go on to the next topic: **Reinstalling the Ion Optics and Mass Analyzer**.

Reinstalling the Ion Optics and Mass Analyzer

Use the following procedure to reinstall the ion optics and mass analyzer onto the top cover plate of the vacuum manifold:

> **Note**. Wear clean, lint-free, nylon or cotton gloves when you handle components of the ion optics and mass analyzer.

1. Insert the cylindrical end of the analyzer mount (with the mass analyzer and second octapole [the octapole with two lead pins] attached) into the opening in the baffle on the top cover plate of the vacuum manifold. Ensure that the open side of the analyzer mount is away from the top cover plate. See Figure 5-5 on page 5-24.
2. Secure the analyzer mount to the baffle with the two thumb screws.
3. Insert the interoctapole lens, lead pin first, through the opening in the baffle. Turn the interoctapole lens until the lead pin is on the same side as the 8-pin feedthrough. Ensure that the second octapole is held securely between the endcap electrode and the interoctapole lens. Also ensure that the lead pins on the second octapole are on the same side as the 4-pin feedthrough.
4. Attach the split (first) octapole and octapole mount to the baffle on the top cover plate with the two thumb screws. Ensure that the interoctapole lens is held securely between the two octapoles. Also ensure that the lead pins on the split octapole are on the same side as the 4-pin feedthrough.
5. Inspect the ion optics. Ensure that all the parts are aligned properly and that they all fit together snugly.
6. Reconnect the four electrical leads from the 4-pin feedthrough to the split (first) octapole according to the wiring diagram shown in Figure 5-8.
7. Reconnect the two electrical leads from the other 4-pin feedthrough to the second octapole according to the wiring diagram shown in Figure 5-8.

8. Reconnect the electrical lead from pin 2 of the 8-pin feedthrough to the interoctapole lens according to the wiring diagram shown in Figure 5-8.
9. Reconnect the electrical lead from pin 4 of the 8-pin feedthrough to the entrance endcap electrode according to the wiring diagram shown in Figure 5-8, by inserting the pin on the end of the lead into the socket in the electrode.
10. Reconnect the electrical lead from pin 5 of the 8-pin feedthrough to the exit endcap electrode according to the wiring diagram shown in Figure 5-8, by inserting the pin on the end of the lead into the socket in the electrode.
11. Reconnect the electrical lead from pin 7 of the 8-pin feedthrough to the exit lens according to the wiring diagram shown in Figure 5-8. Ensure that the exit lens lead pin does not contact the nut.
12. Reconnect the damping gas line to the nipple on the exit endcap electrode.

Note. Check all leads and ensure that they are secure and that they go to the proper electrodes.

Go on to the next topic: **Cleaning the Ion Detection System**.

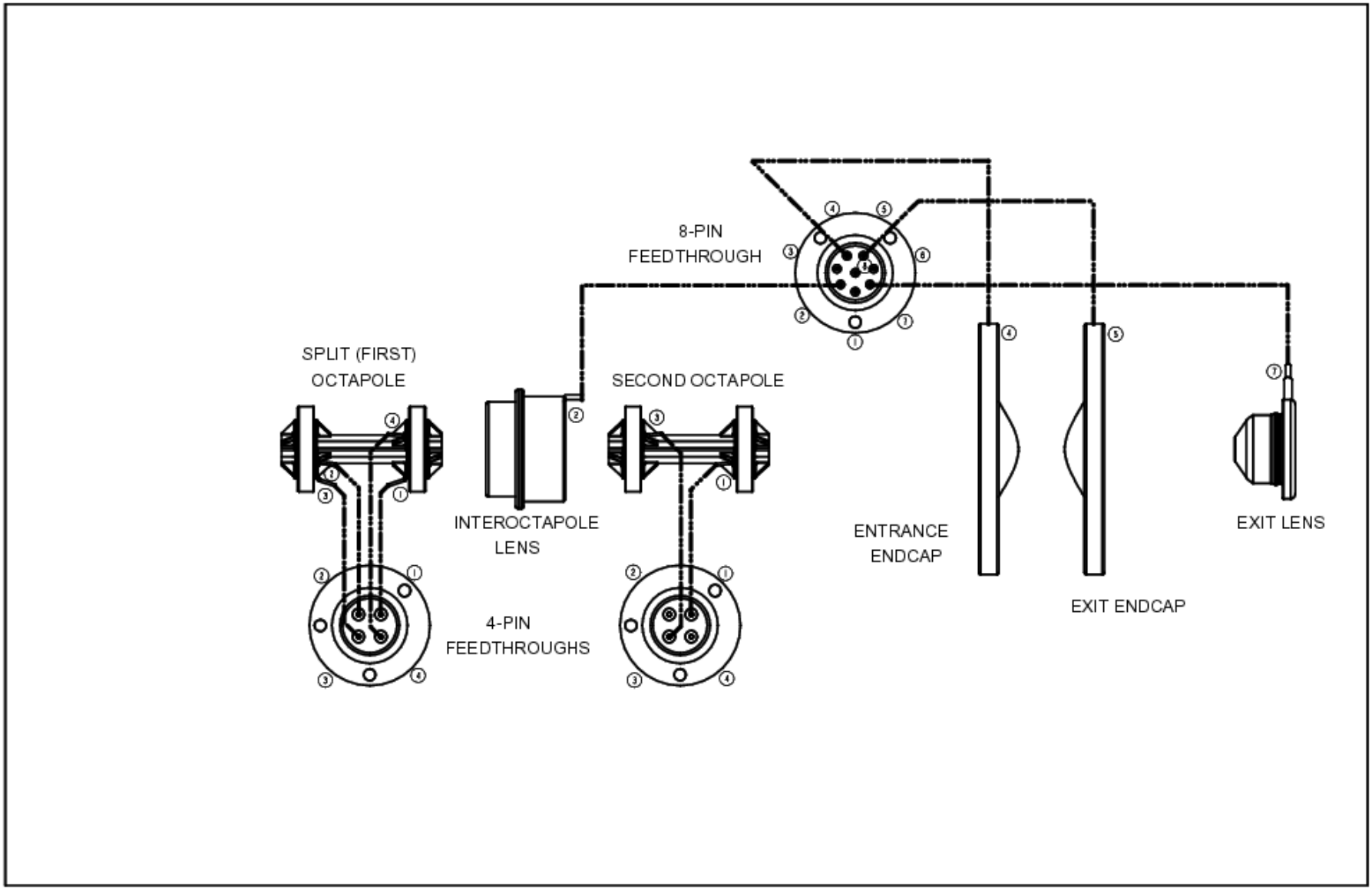

Figure 5-8. Wiring diagram for the ion optics and mass analyzer

Cleaning the Ion Detection System

The conversion dynode and electron multiplier of the ion detection system must be kept dust free. Clean the conversion dynode and electron multiplier whenever you remove the top cover plate of the vacuum manifold. Cleaning the conversion dynode and electron multiplier involves only blowing them with clean, dry gas such as nitrogen. Freon gas is not recommended. **Do not use liquids to clean the ion detection system components.** Always cover the opening in the top of the vacuum manifold with a large, lint-free tissue whenever you remove the top cover plate of the vacuum manifold.

Go on to the next topic: **Reinstalling the Top Cover Plate of the Vacuum Manifold**.

Reinstalling the Top Cover Plate of the Vacuum Manifold

Use the following procedure to reinstall the top cover plate of the vacuum manifold:

1. Remove the tissue from the opening in the top of the vacuum manifold.
2. Check the O-ring that surrounds the opening for signs of wear, and replace it if necessary (P/N 97000-40015). Make sure that the O-ring is seated properly.

> **Note.** Periodically, remove any contamination that might be on the inner walls of the manifold by wiping the inner walls with a lint-free tissue soaked in HPLC-grade methanol. Use a cotton-tipped applicator soaked in methanol to clean around inlets and feedthroughs.

3. Carefully lift the top cover plate up by its two handles and turn it over. Orient the top cover plate such that the electron multiplier is over the conversion dynode. Carefully insert the guide posts on the underside of the top cover plate into the guide holes in the vacuum manifold. Slowly lower the cover plate onto the opening in the vacuum manifold. Take care not to damage the components on the underside of the cover plate. Ensure that the cover plate is seated properly on the vacuum manifold.
4. Use a 7/16-in. open-end wrench to reconnect the helium damping gas line to the fitting.
5. Reconnect (at ANAL. AUX 1 IN) the octapoles cable that comes from the Analyzer Auxiliary PCB.
6. Reconnect (at ANALYZER) the lenses cable that comes from the System Control PCB.
7. Reconnect (at ANAL. AUX 2 IN and ANAL. AUX 3 IN) the two endcap electrode cables that come from the Analyzer Auxiliary PCB.

8. Reconnect (at ACQU/DSP) the electrometer cable.
9. Reconnect (at MULT) the electron multiplier high voltage cable that comes from the electron multiplier power supply.

Go on to the next topic: **Reinstalling the Top Cover of the MS Detector**.

Reinstalling the Top Cover of the MS Detector

Reinstall the top cover of the MS detector as follows:

1. Open the left and right front doors of the MS detector.
2. With one hand under the center of the top cover, place the top cover on the MS detector chassis. Slide the top cover forward until it is engages the four guides located at the rear of the chassis.
3. Lower the front of the top cover onto the chassis so that the two guide posts located on the front underside of the top cover enter the guide holes located on the top of the chassis.
4. Secure the top cover to the chassis with the two latches located on the front of the chassis.
5. Close the left and right front doors of the MS detector.
6. Reconnect any tubing between the syringe pump and the API source to accommodate your instrument configuration.

Go on to the next topic: **Starting Up the System**.

Starting Up the System

Start up the system as described in the topic **Starting Up the System After a Complete Shutdown** on page 6-7 in the **System Shutdown, Startup, and Reset** chapter.

Go on to the next topic: **Tuning the Ring Electrode and Octapole RF Voltages**.

Tuning the Ring Electrode and Quadrupole/Octapole RF Voltages

You need to tune the ring electrode RF voltage and the quadrupole/octapole RF voltage whenever you service the mass analyzer or ion optics. You also need to tune these voltages if you replace any electronic assembly that is involved in producing the RF voltages. Use the Diagnostics program to tune the ring electrode and quadrupole/octapole RF voltages.

To tune the ring electrode and octapole RF voltages, proceed as follows:

1. Allow the LCQ Deca XP MAX to pump down for at least 15 min after start up.
2. Choose **Start > Programs > Xcalibur > LCQ Tune** to open the Tune Plus window.
3. Choose **Control > On** to turn the LCQ Deca XP MAX On.
4. Open the Diagnostics dialog box and Graph view as follows:
   a. In the Tune Plus window, choose **View > Display Graph View** to open the Graph view.
   b. In the Tune Plus window, choose **Diagnostics > Diagnostics** to open the Diagnostics dialog box.
   c. Select the Graphs tab to display the Graphs page.
   d. Reposition the Diagnostics dialog box so that it does not obscure the Graph view. See Figure 5-9.
5. Tune the quadrupole/octapole RF voltage, as follows:
   a. Select **Tune multipole frequency** in the Test Type list box.
   b. Select the **Once** option button in the How Many Times group box.
   c. Click on the **Start** button to start the quadrupole/octapole RF voltage tune program. A frequency function appears in the Graph view. See Figure 5-10. The minimum of the frequency function should lie between 2400 and 2550 kHz.
   d. When the quadrupole/octapole tune program is finished, LCQ Deca XP MAX displays the message: *Do you want to accept the octapole frequency?* Click on the **Yes** button.

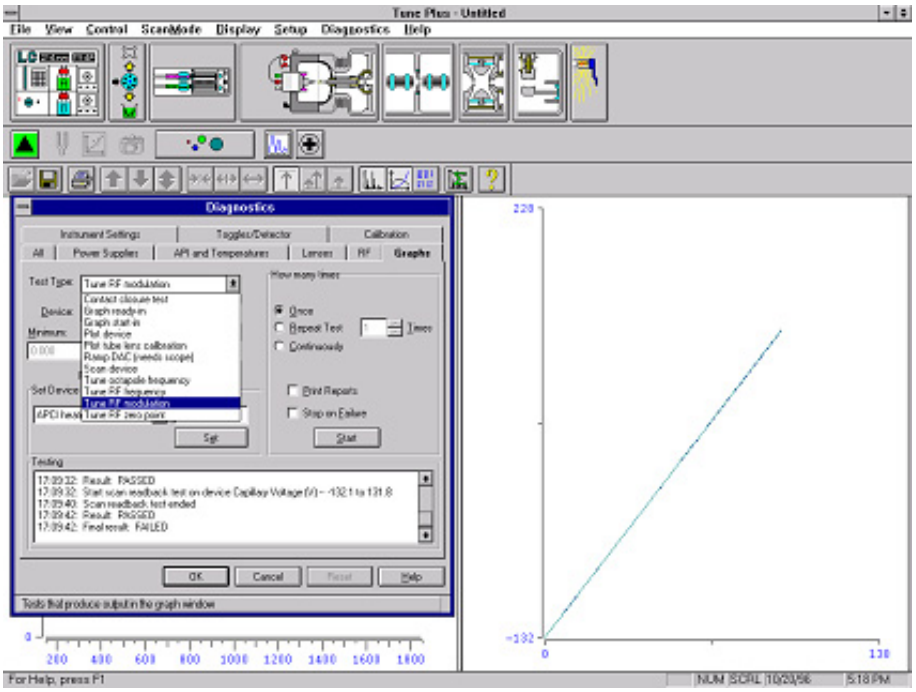

Figure 5-9. Diagnostics dialog box and Graph view

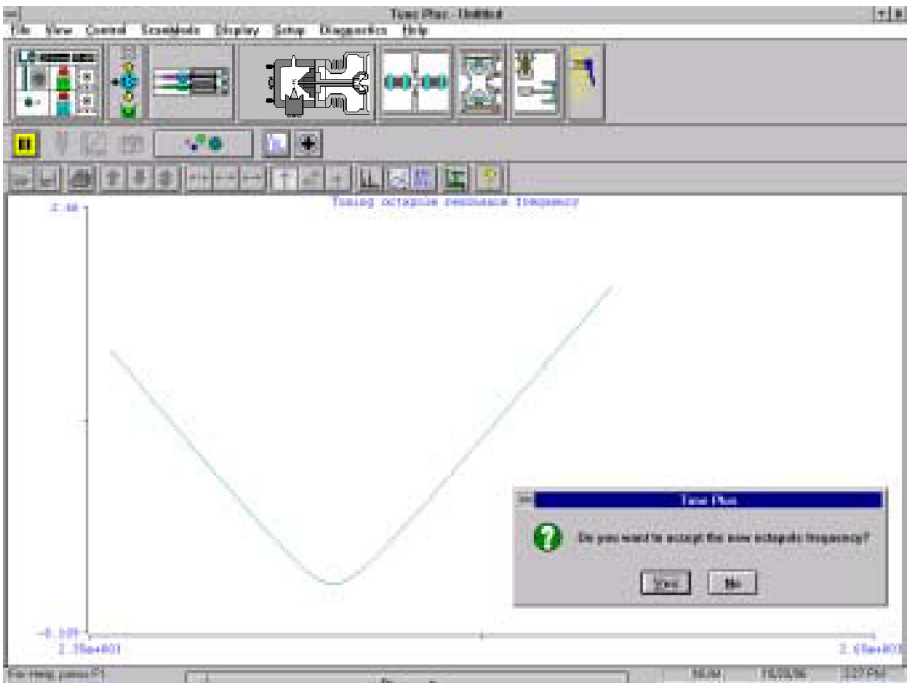

Figure 5-10. Graph view for octapole RF voltage tuning

6. Tune the ring electrode RF voltage modulation, as follows:
   a. Select *Tune RF modulation* in the Test Type text box.
   b. Select the Once option button in the How Many Times group box.
   c. Click on the **Start** button to start the ring electrode RF modulation tune program. The Graph view should look like Figure 5-11:
      - The standing wave ratio switch line should be at 10 V over the entire range.
      - The detected RF voltage should be a straight line that begins at the origin and intersects the standing wave ratio switch line near the highest mass line.
      - The RF voltage modulation should be a curved line that begins at the origin and intersects the highest mass line at a value between 3.5 and 4.5 V.
   d. Inspect the Graph view:
      - If the three above conditions are met, proceed to step 7.
      - If the three above conditions are met over part of the range but not all of the range (the curves flatten or change value abruptly), tune the RF voltage frequency as described in step 7. Then, repeat step 6.

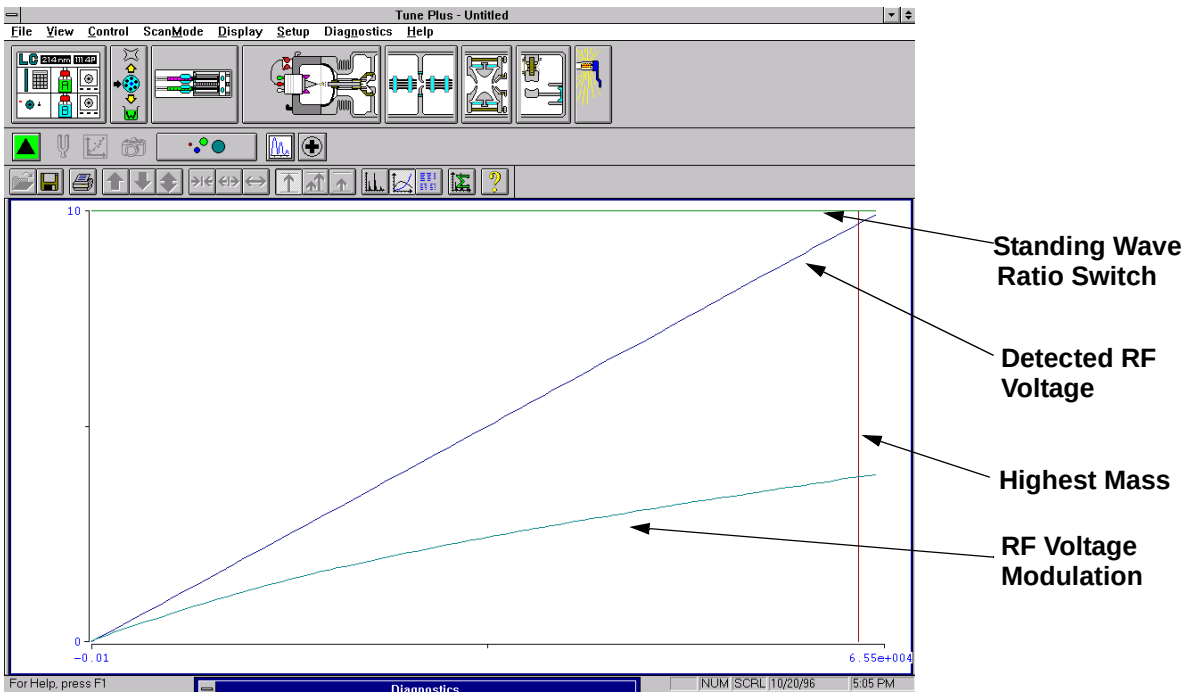

Figure 5-11. Graph view for ring electrode RF voltage modulation tuning

- If the standing wave ratio switch, detected RF voltage, and RF voltage modulation lines are all flat, then there might be a loose connection. Make sure that all cables and leads are properly connected and that the spring-loaded pin on the RF voltage feedthrough properly contacts the ring electrode. Repeat step 6.

7. Tune the ring electrode RF voltage frequency, as follows:

   a. Select *Tune RF frequency* in the Test Type text box. The Continuously option button in the How Many Times group box is automatically selected.

   b. Click on the **Start** button to start the ring electrode RF frequency tune program. The Graph view displays several tune functions, a frequency cursor, and a frequency window. See Figure 5-12.

   c. Allow the program to make at least five passes. Then check to see whether the frequency cursor lies within the frequency window.

      - If the frequency cursor lies within the frequency window, then the ring electrode RF voltage frequency is tuned properly. Click on the **Stop** button and exit from the diagnostics program.

      - If the frequency cursor lies outside the frequency window, then you need to manually adjust the ring electrode RF voltage frequency. Leave the Graph view displayed. Go on to the next step.

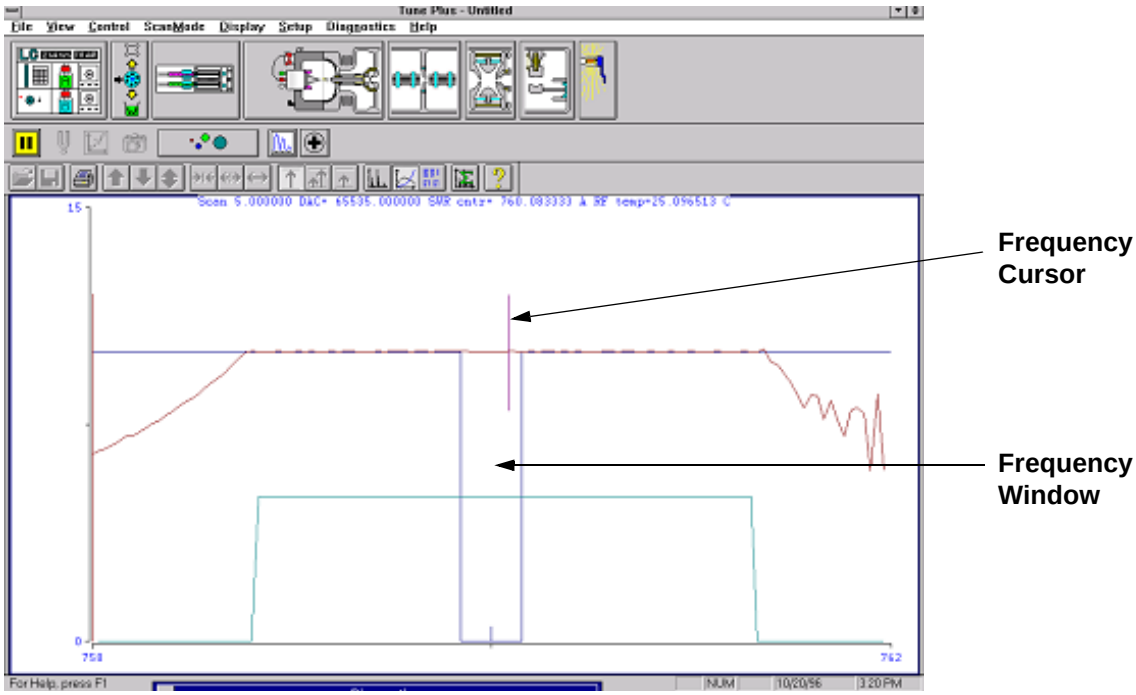

Figure 5-12. Graph view for ring electrode RF voltage tuning

8. Manually adjust the ring electrode RF voltage frequency, as follows:
   a. Open the left front door of the MS detector.
   b. With a Phillips screw driver, remove the air deflector to expose the tuning stud.
   c. With a wrench, loosen the 9/16-in. lock nut that holds the tuning stud in place. See Figure 5-13.
   d. With a screw driver, turn the tuning stud until the frequency cursor lies slightly to the left of the center of the frequency window. (The cursor should shift slightly to the right when the air deflector is reinstalled.)
   e. Tighten the 9/16-in. lock nut.
   f. Reinstall the air deflector and close the left front door of the MS detector. Make sure that the frequency cursor is still within the frequency window. If necessary, repeat the above steps.
   g. Select the Stop button to stop the ring electrode RF voltage frequency tune program.

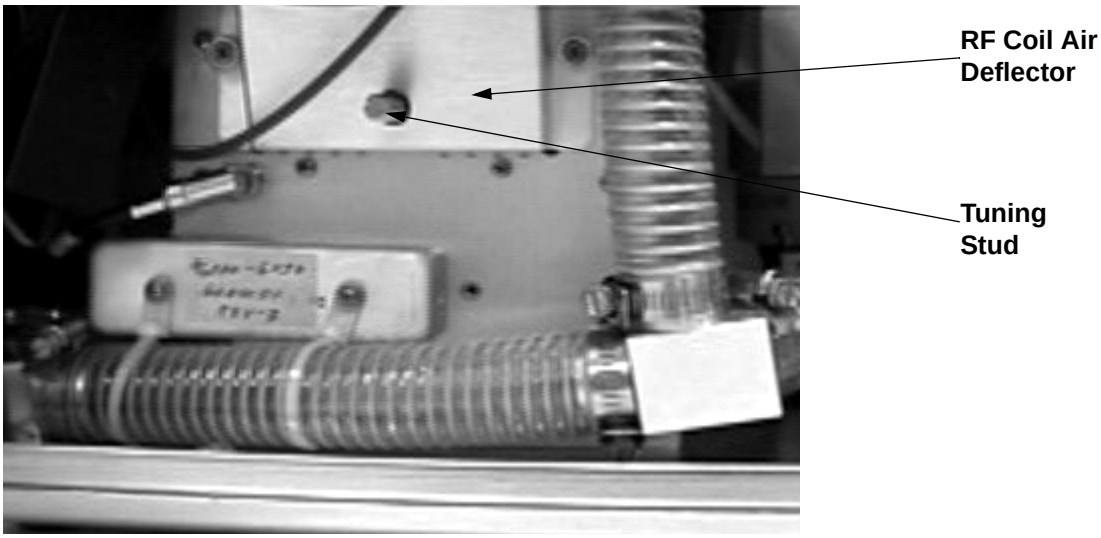

Figure 5-13. Ring electrode RF voltage tuning stud

5.5 Replacing the Electron Multiplier

The electron multiplier of the ion detection system includes an anode and a cathode. The anode and cathode have finite lifetimes. The anode loses sensitivity over time due to contamination of its surface. Things that decrease the lifetime of the cathode include heat, electron flow (which produces internal heat), air (which causes oxidation and arcing), and water (which causes arcing).

The following symptoms suggest that the electron multiplier may need replacing:

- Excessive noise in the mass spectrum
- Inability of the multiplier gain calibration procedure to achieve a gain of 3×10^5 electrons per ion with an electron multiplier voltage less than or equal to 2.5 kV

You can read the current value of the electron multiplier voltage in the Ion Detection System dialog box, which can be reached from the Tune Plus window by choosing **Setup > Ion Detection System**.

If you are having problems with the ion detection system, you need to replace the anode and cathode of the electron multiplier. You can replace the cathode separately or as part of the electron multiplier assembly.

To replace the anode and cathode of the electron multiplier, or the entire electron multiplier assembly, proceed as follows:

1. Shut down and vent the system as described in the topic **Shutting Down the System Completely** on page 6-5 in the **System Shutdown, Startup, and Reset** chapter.

CAUTION. Make sure that the LCQ Deca XP MAX power cord is unplugged before you proceed.

2. Remove the top cover of the MS detector as described in the topic **Removing the Top Cover of the MS Detector** on page 5-22.
3. Remove the top cover plate of the vacuum manifold as described in the topic **Removing the Top Cover Plate of the Vacuum Manifold** on page 5-22.

Note. Wear clean, lint-free, nylon or cotton gloves when you handle the electron multiplier components.

4. With an Allen wrench, remove the two socket-head screws that hold the electron multiplier support to the top cover plate of the vacuum manifold. See Figure 5-14 on page 5-42.
5. With one hand hold the high voltage tube and with the other hand hold the electron multiplier support. Then, detach the high voltage tube from the

high voltage feedthrough in the top cover plate and remove the electron multiplier as a unit. (The anode remains in the anode feedthrough in the top cover plate.)

6. Remove the anode from the anode feedthrough by unscrewing it counterclockwise by hand.
7. Install a new anode (P/N 96000-20076) in the anode feedthrough in the top cover plate by screwing it clockwise by hand.

   If you want to replace the entire electron multiplier, install a new electron multiplier (P/N 96000-60036) in the next step. If you want to replace only the cathode, install the old electron multiplier in the next step.

> **Caution.** Be careful not to damage the surface of the electron multiplier shield. The electron multiplier shield has been electropolished to prevent field emission.

8. With one hand holding the high voltage tube and the other hand holding the electron multiplier support, install the electron multiplier on the top cover plate. Ensure that the high voltage tube is properly inserted in the high voltage feedthrough and that the screw holes in the electron multiplier support are aligned with the screw holes in the top cover plate.
9. Reinstall the two socket-head screws that secure the electron multiplier support to the top cover plate. Tighten the screws with an Allen wrench.
   - If you installed a new electron multiplier in step 8, go to step 11.
   - If you want to replace the cathode, go on to the next step.
10. To replace the cathode, proceed as follows. See Figure 5-15 on page 5-43.
    a. With a Phillips screwdriver, loosen (but do not remove) the two screws that secure the support plates to the high voltage ring.
    b. With one hand, hold the high voltage tube. With the other hand, hold the high voltage ring. Then, detach the high voltage tube from the high voltage feedthrough and remove the electron multiplier. Place it on a clean surface. (The electron multiplier support and the support plates should remain attached to the top cover plate.)
    c. Turn the assembly over. With a Phillips screwdriver, remove the two screws that secure the electron multiplier shield to the high voltage ring.
    d. Remove the electron multiplier shield and cathode from the high voltage ring.
    e. Insert the narrow end of a new cathode (P/N 00022-02400) first through the spring washer and then through the high voltage ring.
    f. Place the electron multiplier shield over the wide end of the cathode such that the screw holes in the electron multiplier shield are aligned with the screw holes in the high voltage ring.

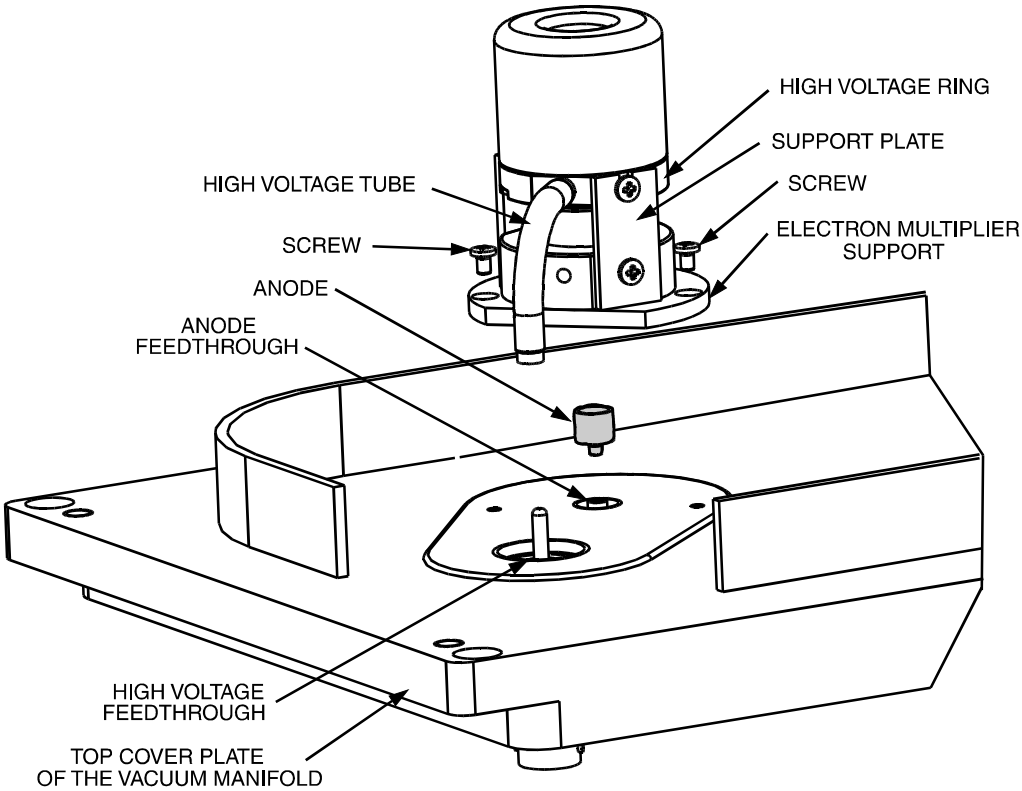

Figure 5-14. Exploded view of the electron multiplier, showing the anode

g. Hold the high voltage ring and electron multiplier shield together to depress the spring washer. Secure the high voltage ring to the electron multiplier shield by using the two Phillips-head screws. (The cathode should be held in place between the high voltage ring and the electron multiplier shield.)

h. Insert the end of the high voltage tube in the electron multiplier feedthrough in the top cover plate. Reattach the high voltage ring to the support plates by inserting the two screws in the sides of the high voltage ring into the notches in the two support plates. Tighten the two Phillips-head screws that secure the high voltage ring to the two support plates.

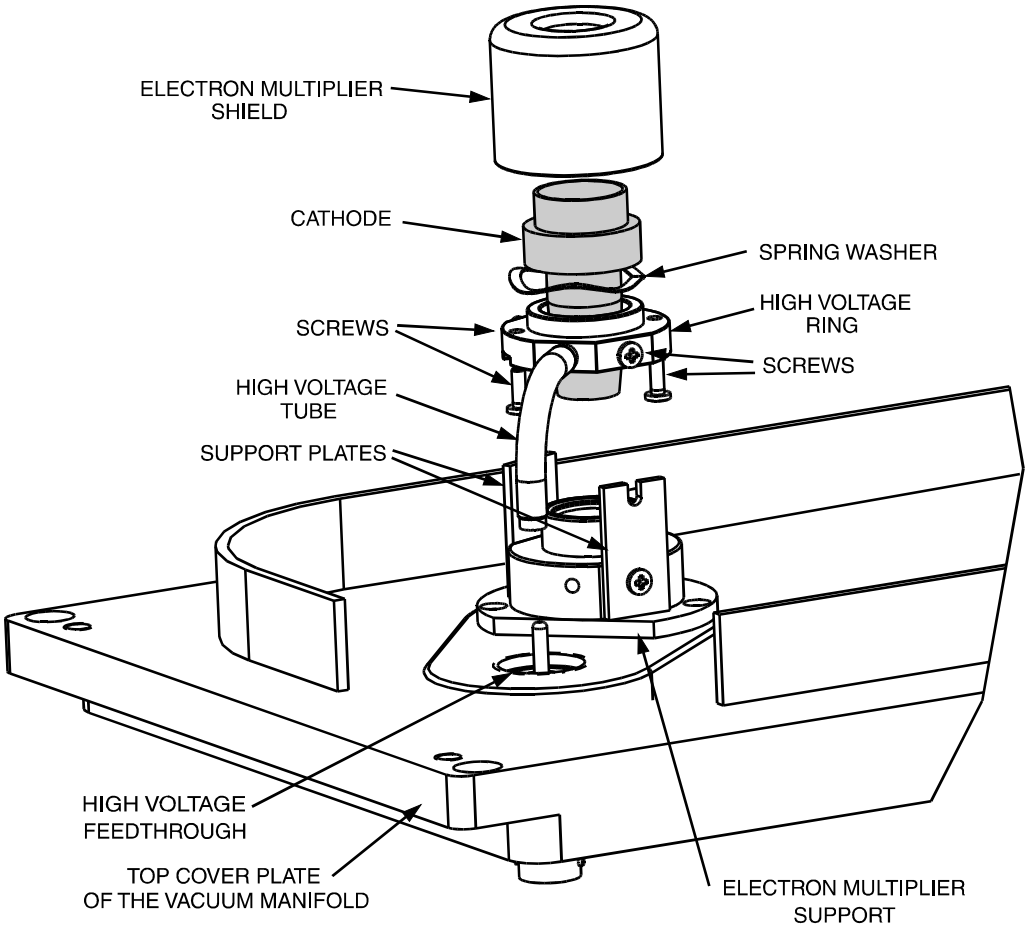

Figure 5-15. Exploded view of the electron multiplier, showing the cathode

11. Reinstall the top cover plate of the vacuum manifold over the opening in the vacuum manifold as described in the topic **Reinstalling the Top Cover Plate of the Vacuum Manifold** on page 5-33.
12. Reinstall the top cover of the MS detector as described in the topic **Reinstalling the Top Cover of the MS Detector** on page 5-34.
13. Start up the LCQ Deca XP MAX system as described in the topic **Starting Up the System After a Complete Shutdown in the System Shutdown, Startup, and Reset** chapter.
14. Set the electron multiplier voltage to -800 V as follows:
    a. Choose **Start > Programs > Xcalibur > LCQ Tune** to open the Tune Plus window.

b. From the Tune Plus window, choose **Diagnostics > Diagnostics**.

c. Select the Graphs tab to display the Graphs page.

d. In the Set Device Value option box, select Multiplier (V).

e. In the text box to the right of the Set Device Value option box, enter **-800**.

f. Click on the **Set** button to set the electron multiplier voltage to -800 V.

g. Click on the **OK** button to return to Tune Plus.

15. Calibrate the electron multiplier voltage as follows:

    a. Allow the system to pump down for at least one hour before you turn on the high voltages.

    b. Set up for the infusion of the tuning solution into the MS detector as described in **LCQ Series Getting Started**.

    c. From the Tune Plus window, choose **Control > Calibrate**. The Calibrate dialog box appears.

    d. Click on the Semi-Automatic tab to display the Semi-Automatic page.

    e. Select the Electron Multiplier Gain option. Click on the **Start** button to start the multiplier gain procedure.

16. After the Electron Multiplier Gain program is finished, set up for ESI or APCI operation as described in **LCQ Series Getting Started**.

5.6 Purging the Oil in the Forepump

You need to purge (decontaminate) the oil in the forepump on a daily basis to remove water and other dissolved chemicals from the pump oil. Water and other chemicals in the forepump can cause corrosion and decrease the lifetime of the pump. A good time to purge the oil is at the end of the working day after you flush the API probe, spray shield, and ion transfer capillary.

To purge the oil in the forepump, proceed as follows:

1. Turn off the flow of sample solution from the LC to the MS detector.
2. From the Tune Plus window, choose **Control > Standby** (or click on the On/Standby button) to put the MS detector in Standby.
3. Withdraw the API flange from the spray shield and place a septum over the entrance to the ion transfer capillary.
4. Open the gas ballast valve on the forepump by turning it to position **|**. Refer to the manual that came with the pump for the location of the gas ballast valve.
5. Allow the pump to run for 2 hours with the gas ballast valve open.
6. After 2 hours, close the gas ballast valve by turning it to position O.
7. Top off oil in the forepump reservoir if the level is lower than two-thirds of the maximum level visible in the viewing window.

Removing the Turbomolecular Pump

To remove the turbomolecular pump, proceed as follows:

1. Shut down and vent the system as described in the topic **Shutting Down the System Completely** on page 6-5 in the **System Shutdown, Startup, and Reset** chapter. Be sure that the vacuum manifold is completely vented before continuing.
2. Disconnect any sample tubes between the syringe pump and the API source.

CAUTION. Make sure that the LCQ Deca XP MAX power cord is unplugged before you proceed.

3. Open the left and right front doors of the MS detector by loosening the 1/4-in. Allen screw on the right front door with an Allen wrench. (Disconnect any sample tubes between the syringe pump and the API source before opening the right front door.)
4. Remove the top cover of the MS detector as described in the topic **Removing the Top Cover of the MS Detector** on page 5-22.

5. Loosen the hose clamp that secures the vacuum hose to the tee (P/N 97144-20031) See Figure 5-16. Disconnect the vacuum hose from the tee.
6. Remove the AT box.
7. Disconnect the power cable from the turbomolecular pump controller.
8. With a 3/16-in. ball driver or Allen wrench, carefully loosen the two Allen screws that hold the rails and turbomolecular pump to the vacuum manifold.
9. Pull the turbomolecular pump out on the rails. If necessary, disconnect one or more of the vacuum hoses at the foreline union by loosening the clamping rings and then pulling the hoses free from the foreline union.
10. Remove the turbomolecular pump.

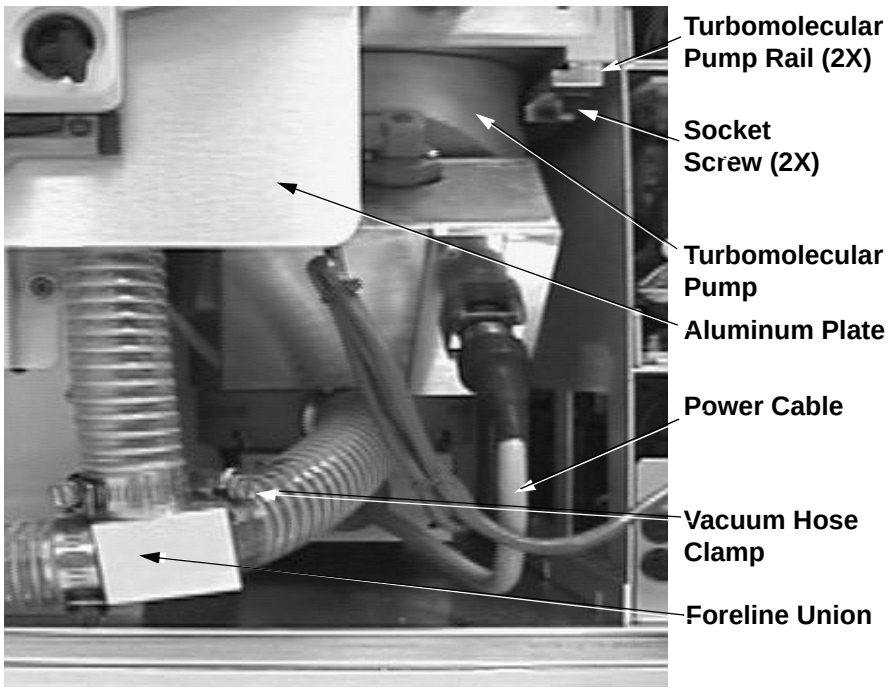

Figure 5-16. Turbomolecular pump

Go on to the next topic: **Reinstalling the Turbomolecular Pump**.

Reinstalling the Turbomolecular Pump

To reinstall the turbomolecular pump, proceed as follows (see Figure 5-16):

1. Check the condition of the Viton O-rings around the two openings on the bottom of the vacuum manifold. (Use a small flashlight to illuminate the O-rings.) If they have any nicks or breaks, replace them with new ones (P/N 00107-11100).
2. Place the turbomolecular pump on the turbomolecular pump rails.
3. Slide the turbomolecular pump into position under the openings in the vacuum manifold.
4. With a 3/16-in. ball driver or Allen wrench, carefully tighten the two Allen screws that hold the rails and turbomolecular pump to the vacuum manifold. Do not overtighten the screws.
5. Reconnect the vacuum hose to the tee P/N 97144-20031). Tighten the hose clamp that secures the vacuum hose to the tee.
6. Reconnect the turbomolecular pump power cable to the turbomolecular pump controller.
7. Reinstall AT box.
8. If necessary, reconnect the vacuum hoses to the foreline union. Tighten the clamping rings to secure the vacuum hoses to the foreline union.
9. Reinstall the top cover of the MS detector by following the procedure in the topic **Reinstalling the Top Cover of the MS Detector** on page 5-34.
10. Close the left and right front doors of MS detector.
11. Reconnect any tubing between the syringe pump and the API source that you disconnected earlier.
12. Restart the system as described in the topic **Starting Up the System After a Complete Shutdown** on page 6-7 in the **System Shutdown, Startup, and Reset** chapter.

5.7 Cleaning the Fan Filter

You need to clean the fan filter, located on the rear of the MS detector, every four months. To clean the fan filter, proceed as follows:

1. Remove the fan filter by reaching behind the MS detector and pulling the fan filter out to the right.
2. Wash the fan filter in a solution of soap and water.
3. Rinse the fan filter with tap water.
4. Squeeze the water from the fan filter and allow it to air dry.
5. When the fan filter is completely dry, reinstall it on the rear of the MS detector [or replace it with a new one (P/N 97000-20299)].

Chapter 6
System Shutdown, Startup, and Reset

Many maintenance procedures for the LCQ Series MS detector require that the MS detector be shut down completely. In addition, the MS detector can be placed in Standby if the system is not to be used for 12 hours or more.

This chapter contains the following sections:

- Shutting Down the System in an Emergency
- Placing the System in Standby Condition
- Shutting Down the System Completely
- Starting Up the System after a Complete Shutdown
- Resetting the MS Detector
- Resetting the Tune and Calibration Parameters to their Default Values
- Resetting the Data System
- Turning Off Selected MS Detector Components

6.1 Shutting Down the System in an Emergency

If you need to turn off the MS detector in an emergency, place the main power circuit breaker switch, located on the power panel on the right side panel of the MS detector (see Figure 6-1 and Figure 6-2), in the Off (O) position. This turns off all power to the MS detector, including the vacuum pumps. Although removing power abruptly will not harm any component within the system, this is not the recommended shutdown procedure to follow. Refer to the **Shutting Down the System Completely** topic, on page 6-5, for the recommended procedure.

To turn off the LC, autosampler, and computer in an emergency, use the on/off switches on the LC, autosampler, and computer, respectively.

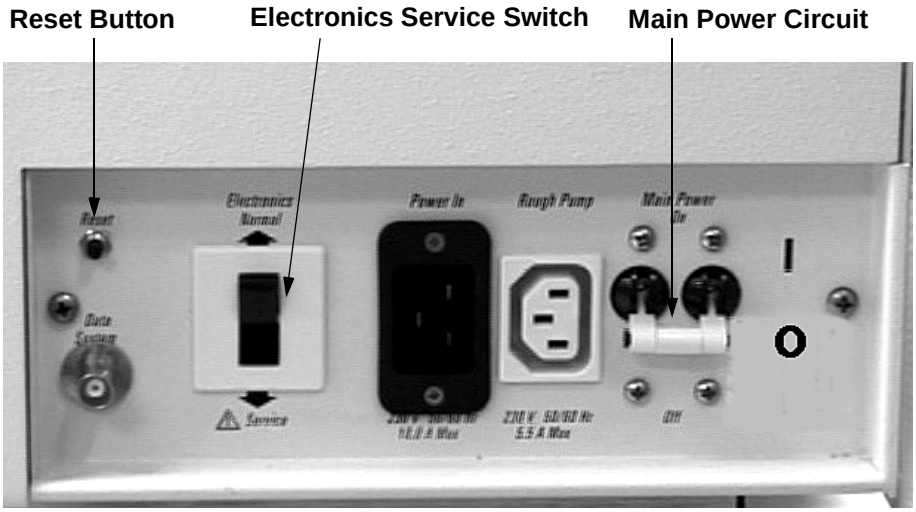

Figure 6-1. LCQ Advantage MAX power panel, showing the Reset button electronics service switch, and the main power circuit breaker switch

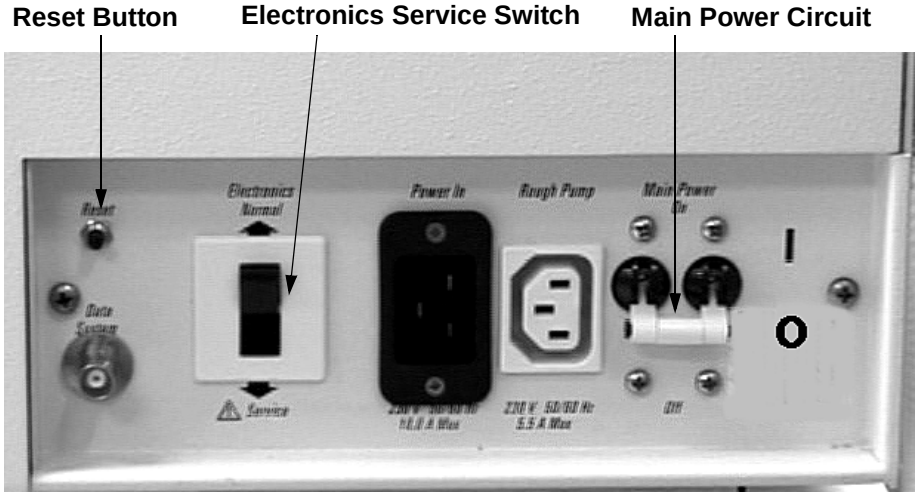

Figure 6-2. **LCQ Deca XP MAX power panel, showing the Reset button electronics service switch, and the main power circuit breaker switch**

6.2 Placing the System in Standby Condition

The LCQ Series system does not need to be shut down completely if you are not going to use it for a short period of time, such as overnight or over weekends. When you are not going to operate the system for 12 hours or more, you can leave the system in a standby condition.

Use the following procedure to place the LCQ Series system in the standby condition:

1. Wait until data acquisition, if any, is complete.
2. Turn off the flow of sample solution from the LC to the API source, as follows:
   a. In the Tune Plus window, click on the LC button. The Inlet Direct Control dialog box appears.
   b. Click on **Stop** to stop the LC pump.

> **Note.** For instructions on how to operate the LC from the front panel, refer to the manual that came with the LC.

3. From the Tune Plus window, choose **Control > Standby** (or click on the On/Standby button) to put the MS detector in Standby. When you choose **Control > Standby**, the LCQ Series MS detector turns off the electron multiplier, conversion dynode, 8 kV power to the API source, ring electrode RF voltage, and octapole RF voltage. LCQ Series also turns off the auxiliary gas and sets the sheath gas flow to 0 units. See Table 6-1 on page 6-16 for the On/Off status of MS detector components when the MS detector is in the standby condition. The System LED on the front panel of the MS detector is illuminated yellow when the system is in Standby.
4. Flush the spray shield and the entrance end of the ion transfer capillary of the API source as describe in the topic **Flushing the Spray Shield and Ion Transfer Capillary** in the **MS Detector Maintenance** chapter. Cap the ion transfer capillary with the septum. Leave the API flange withdrawn from the spray shield.
5. Purge the forepump oil as described in the topic **Purging the Forepump Oil** in the **MS Detector Maintenance** chapter.
6. Leave the MS detector power on.
7. Leave the LC power on.
8. Leave the autosampler power on.
9. Leave the data system power on.

6.3 Shutting Down the System Completely

The LCQ Series system does not need to be shut down completely if you are not going to use it for a short period of time, such as overnight or over weekends. (Refer to the topic **Placing the System in Standby Condition**, above.) Shut down the system completely only if it is to be unused for an extended period or if it must be shut down for a maintenance or service procedure.

Use the following procedure to shut down the LCQ Series system completely:

1. Turn off the flow of sample solution from the LC (or other sample introduction device).

> **Note.** For instructions on how to operate the LC from the front panel, refer to the manual that came with the LC.

2. From the Tune Plus window, choose **Control > Standby** (or click on the On/Standby button) to put the MS detector in Standby. When you place the MS detector in Standby mode, the LCQ Series MS detector turns off the electron multiplier, conversion dynode, 8 kV power to the API source, main RF voltage, and octapole RF voltage, sheath and auxiliary gasses.
3. Place the electronics service switch, located on the power panel (see Figure 6-1 on page 6-2 for the LCQ Advantage MAX, or Figure 6-2 on page 6-3 for the LCQ Deca XP MAX), in the Service position. Power to the non-vacuum system electronics is turned off when you place the electronics service switch in the Service position.
4. Place the main power circuit breaker switch, located on the power panel (Figure 6-2) in the Off (O) position. When you place the main power circuit breaker switch in the Off (O) position, the following occurs:
   - All power to the MS detector, including the turbomolecular pump and rotary vane pump, is turned off. (All LEDs on the front panel of the MS detector are off.)
   - The battery backup on the Vent Delay PCB provides power to the vent valve for 30 s. After 30 s, a circuit on the Vent Delay PCB times out, and power to the vent valve solenoid is shut off. When power to the vent valve solenoid is shut off, the vent valve opens and the vacuum manifold is vented to filtered air. You can hear a hissing sound as the air passes through the air filter.
   - After about 2 min, the vacuum manifold is at atmospheric pressure.
5. Unplug the power cord for the MS detector.

> **CAUTION.** Allow heated components to cool before servicing them.

> **Note.** If you are planning to perform routine or preventive system maintenance on the MS detector only, you do not need to turn off the LC, data system, and autosampler. In this case, the shutdown procedure is completed. However, if you do not plan to operate your system for an extended period of time, we recommend that you turn off the LC, data system, and autosampler as described in steps 6 through 11 below.

6. Turn off the (optional) LC. Follow the procedure described in the manual that came with the LC.
7. Turn off the helium damping gas supply at the tank.
8. Turn off the nitrogen supply at the tank.
9. Turn off the data system as follows:
   a. Choose **Start > Shut Down** from the Microsoft Windows 2000 task bar. The Shut Down Microsoft Windows dialog box appears.
   b. Select the Shut Down The Computer option button, and then click on **Yes** to start the Microsoft Windows 2000 shutdown procedure.
   c. When the Microsoft Windows 2000 shutdown procedure tells you that it is safe to turn off the computer, turn off the monitor and computer by using the on/off switches.
10. Turn off the (optional) printer by using the on/off switch.
11. Turn off the (optional) autosampler by using the main power on/off switch.

6.4 Starting Up the System after a Complete Shutdown

To start up the LCQ Series system after it has been shut down completely, you need to do the following:

- Start up the (optional) LC
- Start up the data system
- Start up the MS detector
- Start up the (optional) autosampler
- Set up conditions for operation

Starting Up the LC

To start up the LC, follow the startup procedure described in the manual that came with the LC. If necessary, configure the LC as described in **LCQ Series Getting Connected**. Do not turn on the liquid flow to the MS detector.

Starting Up the Data System

Use the following procedure to start up the data system:

1. Turn on the monitor, computer, and printer.
2. Observe the Microsoft Windows 2000 startup procedure on the monitor.
3. Press **<Ctrl>+<Alt>+<Del>** when you are prompted to do so. Then, click on **OK** or enter your password (if you have one) in the Logon Information dialog box to complete the start up procedure.

Starting Up the MS Detector

Use the following procedure to start up the MS detector.

> **Note.** The data system must be running before you start up the MS detector. The MS detector will not operate until software is received from the data system.

1. Turn on the flows of helium and nitrogen at the tanks if they are off.
2. Make sure that the main power circuit breaker switch is in the Off (O) position and the electronics service switch is in the Service position.
3. Plug in the power cord for the MS detector.

4. Place the main power circuit breaker switch in the On (|) position. When you place the main power circuit breaker switch in the On (|) position, the forepump and the turbomolecular pump are started. All LEDs on the MS detector front panel are off.
5. Allow the MS detector to pump down for 5 min.
6. Place the electronics service switch in the Operational position. When you place the electronics service switch in the Operational position, the following occurs:
   - The Power LED on the MS detector front panel is illuminated green to indicate that power is provided to the MS detector electronics. (The electron multiplier, conversion dynode, 8 kV power to the API source, main RF voltage, and octapole RF voltage remain off.)
   - The embedded computer reboots. After several seconds the Communication LED on the front panel is illuminated yellow to indicate that the data system and the MS detector have started to establish a communication link.
   - After several more seconds, the Communication LED is illuminated green to indicate that the data system and the MS detector have established a communication link. Ensure that the instrument console window is active. Software for the operation of the MS detector is then transferred from the data system to the MS detector.
   - After 3 minutes, the System LED is illuminated yellow to indicate that the software transfer from the data system to the MS detector is complete and that the instrument is in Standby.

Note. The Vacuum LED on the front panel of the MS detector is illuminated green only if the pressure in the vacuum manifold is below the maximum allowable pressure (5×10^{-4} Torr in the analyzer region, and 2 Torr in the capillary-skimmer region), and the safety interlock switch on the API source is depressed (that is, the API flange is secured to the spray shield).

If you have an autosampler, go on to the next topic: **Starting Up the Autosampler**. If you do not have an autosampler, go to the topic: **Setting Up Conditions for Operation**.

Starting Up the Autosampler

To start up the autosampler, place the main power switch on the autosampler in the on position. If necessary, configure the autosampler. For procedures for placing sample vials, preparing solvent and waste bottles, installing syringes, etc., refer to the manual that came with the autosampler. Refer also to **LCQ Series Getting Connected**.

Setting Up Conditions for Operation

Set up your LCQ Series MS detector for operation as follows:

1. Before you begin data acquisition with your LCQ Series system, you need to allow the system to pump down for at least 1 hour. Operation of the system with excessive air and water in the vacuum manifold can cause reduced sensitivity, tuning problems, and reduced lifetime of the electron multiplier.
2. Ensure that the helium pressure and nitrogen pressure are within the operational limits (helium: 40 ±10 psig [275 ±70 kPa], nitrogen: 100 ±20 psig [690 ±140 kPa]).

> **Note.** Air in the helium line must be purged or given sufficient time to be purged for normal MS detector performance.

3. Open the Tune Plus window by selecting **Start > Programs > Xcalibur > LCQ Tune**.

4. In the Tune Plus window, click on the Status button to open the status panel. See Figure 6-3.
5. Look at the status panel in the Tune Plus window. Check to see if the pressure measured by the ion gauge is below about 5×10^{-5} Torr, and the pressure measured by the Convectron gauge is around 1 Torr. Compare the values of the other parameters in the status panel with values that you recorded previously.
6. Set up for ESI or APCI operation as described in **LCQ Series Getting Started**.

> **Note.** You do not need to calibrate or tune the LCQ Series MS detector each time you restart.
>
> ***Calibration parameters*** are instrument parameters whose values do not vary with the type of experiment. You need to calibrate the LCQ Series MS detector perhaps once a month, and check the calibration once a week. Refer to **LCQ Series Getting Started** for a procedure for calibrating the LCQ Series MS detector.
>
> ***Tune parameters*** are instrument parameters whose values vary with the type of experiment. You need to tune the LCQ Series MS detector (or change the Tune Method) whenever you change the type of experiment. Refer to **LCQ Series Getting Started** for procedures for tuning the LCQ Series MS detector in the ESI or APCI mode. (Note that the LCQ Series MS detector comes with several standard Tune Methods specific for various experimental conditions, so that tuning is often not required for many types of experiments.)

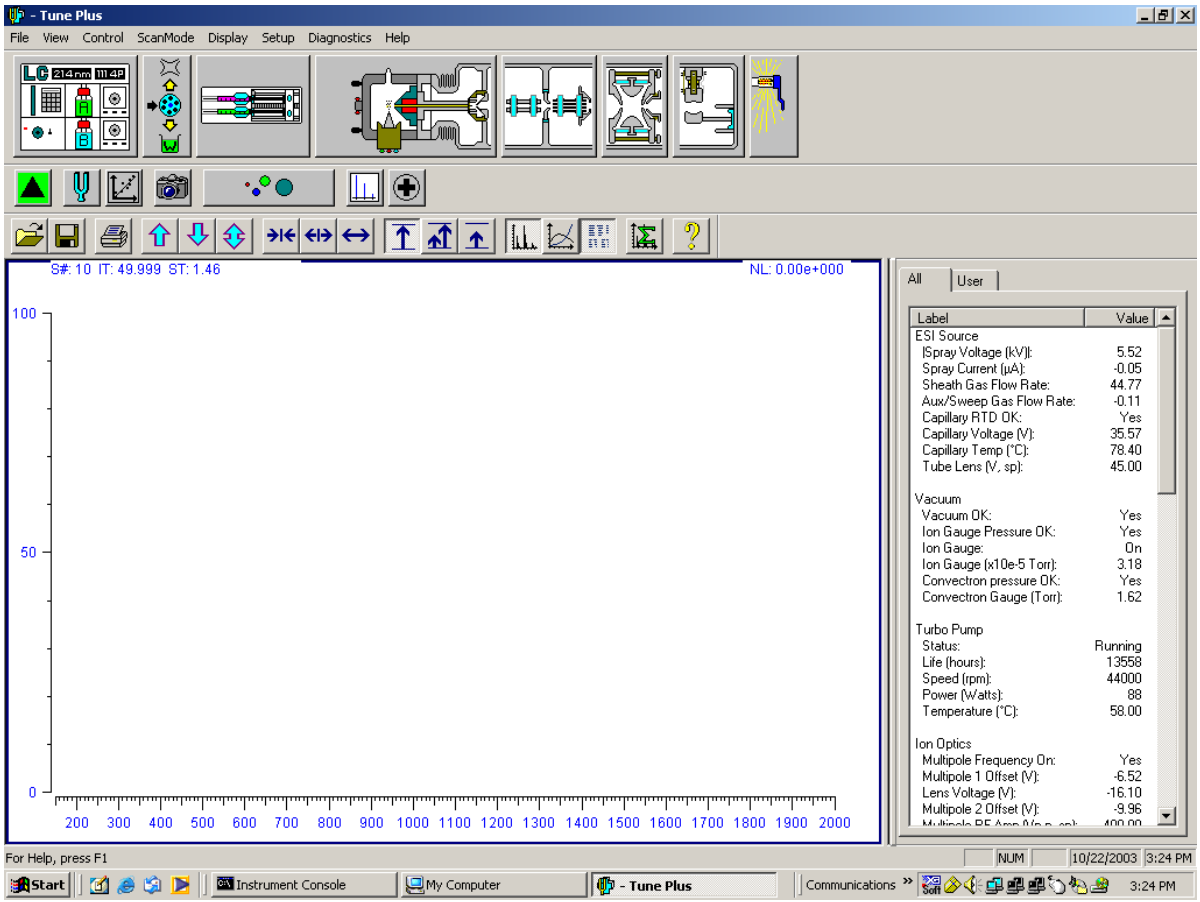

Figure 6-3. Status Panel Open in Tune Plus Window

6.5 Resetting the MS Detector

If communication between the MS detector and data system computer is lost, it may be necessary to reset the MS detector using the Reset button on the power panel. When you press the Reset button (for 3 s), an interrupt in the embedded computer is created. This causes the embedded computer to restart in a known (default) state. See Figure 6-1 on page 6-2 (for LCQ Advantage MAX) or Figure 6-2 on page 6-3 (for LCQ Deca XP MAX) for the location of the Reset button.

The procedure given here assumes that the MS detector and data system computer are both powered on and operational. If the MS detector, data system computer, or both are off, refer to the topic **Starting Up the System after a Complete Shutdown** on page 6-7.

To reset the MS detector, press the Reset button located on the power panel for 3 s. Make sure the Communication LED is extinguished before releasing the Reset button. When you press the Reset button (for 3 s), the following occurs:

- An interrupt on the embedded computer causes the CPU to reboot. All LEDs on the front panel of the MS detector are off except the Power LED.
- After several seconds, the Communication LED is illuminated yellow to indicate that the data system and the MS detector are starting to establish a communication link.
- After several more seconds, the Communication LED is illuminated green to indicate that the data system and the MS detector have established a communication link. Software for the operation of the MS detector is then transferred from the data system to the MS detector.
- After 3 min the software transfer is complete. The System LED is illuminated either green to indicate that the instrument is functional and the high voltages are on, or yellow to indicate that the instrument is functional, and it is in Standby.

6.6 Resetting the Tune and Calibration Parameters to their Default Values

You can reset the LCQ Series MS detector tune and calibration parameters to their default values at any time. This feature may be useful if you have manually set some parameters that have resulted in less than optimum performance. To reset the MS detector tune and calibration parameters to their default values, proceed as follows:

> **Note.** Make sure that the problems that you are experiencing are not due to improper API source settings (spray voltage, sheath and auxiliary gas flow, ion transfer capillary temperature, etc.) before resetting the system parameters to their default values.

1. In the Tune Plus window, choose **File > Restore Factory Calibration** to restore the default calibration parameters, or choose **File > Restore Factory Tune Method** to restore the default tune parameters.
2. To optimize the LCQ Series system parameters (that is, to calibrate or tune the system), perform the calibration or tune procedure as described in **LCQ Series Getting Started**.

6.7 Resetting the Data System

There are two ways to reset the data system:

- By using the Microsoft Windows 2000 shutdown and restart procedure
- By pressing the reset button on the personal computer

Resetting the Data System by Using the Microsoft Windows XP Shutdown and Restart Procedure

If possible, use the Microsoft Windows XP shutdown and restart procedure to shut down and restart the data system so that Microsoft Windows XP can properly close applications and save changes to files.

To reset the data system by using the Microsoft Windows XP shutdown and restart procedure, proceed as follows:

1. Choose **Start > Shut Down** from the Microsoft Windows XP task bar. The Shut Down Microsoft Windows dialog box appears.
2. Select the Restart The Computer option button, and then click on **Yes** to start the Microsoft Windows XP shutdown and restart procedure.
3. Observe the Microsoft Windows XP shutdown and restart procedure on the monitor.
4. Press <**Ctrl**>+<**Alt**>+<**Del**> when you are prompted to do so. Then, click on **OK** or enter your password (if you have one) in the Logon Information dialog box to complete the shutdown and restart procedure.

> **Note.** The communications link between the data system and the MS detector should be automatically reestablished after you reset the data system. When this occurs the Communication LED on the front panel of the MS detector is illuminated yellow and then green. If the system is unable to reestablish the communications link, press the Reset button (for 3 s) on the power panel of the MS detector.

Resetting the Data System by Using the Reset Button on the Personal Computer

If you are unable to reset the data system by using the Microsoft Windows 2000 shutdown and restart procedure, proceed as follows:

1. Press the reset button on the personal computer.
2. Observe the Microsoft Windows XP shutdown and restart procedure on the monitor.

3. Press **<Ctrl>+<Alt>+<Del>** when you are prompted to do so. Then, click on **OK** or enter your password (if you have one) in the Logon Information dialog box to complete the shutdown and restart procedure.
4. When the shutdown and restart procedure has completed, choose **Start > Programs > Xcalibur > LCQ Tune** to display the Tune Plus window.

Note. The communications link between the data system and the MS detector should be automatically reestablished after you reset the data system. When this occurs the Communication LED on the front panel of the MS detector is illuminated yellow and then green. If the system is unable to reestablish the communications link, press the Reset button (for 3 s) on the power panel of the MS detector.

6.8 Turning Off Selected MS Detector Components

There are five ways that you can turn off some or all of the MS detector components

- Turn off individual MS detector components from the Tune Plus window. Turning off individual MS detector components might be necessary when you are troubleshooting or when you are running certain diagnostic procedures.
- Place the MS detector in Standby. Standby is the normal condition to leave the MS detector in when it is not in use. Choose **Control > Standby** (or toggle the On/Standby button) from the Tune Plus window to place the MS detector in Standby.
- Place the MS detector in the Off condition. The Off condition is similar to Standby, except all high voltage components of the MS detector are turned off. Choose **Control > Off** from the Tune Plus window to place the MS detector in the Off condition.
- Place the electronics service switch in the Service position. The electronics service switch allows you to perform maintenance procedures involving non-vacuum system components of the MS detector.
- Place the main power circuit breaker switch in the Off (O) position. Placing the main power circuit breaker switch in the Off (O) position removes all power to the MS detector, including the vacuum system.

The on/off status of MS detector components, voltages, and gas flows is summarized in Table 6-1.

Table 6-1. On/Off Status of MS Detector Components, Voltages, and Gas Flows

MS detector component	Standby	Off	Electronics service switch in Service position	Main power circuit breaker switch in Off (O) position
Electron multiplier	Off	Off	Off	Off
Conversion dynode	Off	Off	Off	Off
Mass analyzer RF/waveform voltages	Off	Off	Off	Off
Mass analyzer dc offset voltage	On	Off	Off	Off
Octapole/Multipole RF voltage	Off	Off	Off	Off
Octapole/Multipole dc offset voltage	On	Off	Off	Off
Interoctapole lens	On	Off	Off	Off
Tube lens	On	Off	Off	Off
Ion transfer capillary heater	On	On	Off	Off
Ion transfer capillary dc offset	On	Off	Off	Off
Corona discharge needle	Off	Off	Off	Off
APCI vaporizer	Off	Off	Off	Off
ESI needle	Off	Off	Off	Off
Sheath gas	Off	Off	Off	Off
Auxiliary gas	Off	Off	Off	Off
Helium damping gas	On	On	On	On
Vent valve	Closed	Closed	Closed	**Open** (after 30 s)
Turbomolecular pump	On	On	On	Off
Forepump	On	On	On	Off
Vent Delay PCB	On	On	On	Off (after 30 s)
Embedded computer	On	On	Off	Off
Turbomolecular Pump Controller	On	On	On	Off
Power supply, electron multiplier and conversion dynode	Off	Off	Off	Off
Power supply, 8 kV	Off	Off	Off	Off
Power supply, +5, ±15, ±24 V dc switching	On	On	Off	Off

Table 6-1. On/Off Status of MS Detector Components, Voltages, and Gas Flows, continued

MS detector component	Standby	Off	Electronics service switch in Service position	Main power circuit breaker switch in Off (O) position
Power supply, +36, -28 V dc switching	On	Off	Off	Off
Power supply, +48, +24 V switching	On	On	On	Off
Power supply, +180 V dc	On	On	Off	Off
Power supply, ±150 V dc	On	Off	Off	Off
Power supply, +36 V dc	On	Off	Off	Off
Power supply, +4 V dc (XP Only)	On	On	Off	Off
Power supply, ±210 V dc linear (LCQ Advantage MAX Only)	On	Off	Off	Off
Power supply, ±205 V dc linear (Toroidal Transformer, XP Only)	On	Off	Off	Off
Fan, turbomolecular pump	On	On	On	Off
Fan, RF coil	On	On	Off	Off
Fan, upper tower	On	On	Off	Off
Fan, lower tower	On	On	On	Off
Fan, embedded computer	On	On	On	Off
Convectron gauge	On	On	Off	Off
Ion gauge	On	On	Off	Off
Syringe pump	On	On	Off	Off

Chapter 7

LCQ Advantage MAX Diagnostics and PCB and Assembly Replacement

Many of the MS detector components can be tested by the LCQ Advantage MAX diagnostics. Thermo Electron's service philosophy for the LCQ Advantage MAX system calls for troubleshooting to the lowest part, assembly, PCB, or module listed in the **Replaceable Parts** chapter. You should replace LCQ Advantage MAX components when indicated by the LCQ Advantage MAX diagnostics, by Thermo Electron San Jose Technical Support, or by a Thermo Electron San Jose Customer Support Engineer.

This chapter contains the following sections:

- Running the LCQ Advantage MAX Diagnostics
- Replacing a Fuse
- Replacing PCBs and Assemblies in the MS Detector

7.1 Running the LCQ Advantage MAX Diagnostics

The LCQ Advantage MAX diagnostics system is used to test the major electronic circuits within the instrument and indicate whether the circuits pass or fail the tests. If there is a problem with the instrument electronics, the LCQ Advantage MAX diagnostics can often locate the problem. You can then often correct the problem yourself by replacing a faulty PCB or assembly.

The LCQ Advantage MAX diagnostics does not diagnose problems that are not electrical in nature. For example, it does not diagnose poor sensitivity due to misaligned or dirty components or to improper tuning. Therefore, it is important to have someone who is familiar with system operation and basic hardware theory run the diagnostics and use it to assist in isolating any problems.

Before running the diagnostics, you should consider the following:

- Did the system fail when you were running samples?
- Did problems occur after you performed maintenance on the instrument, data system, or peripherals?
- Did you change the system's configuration, cables, or peripherals just before the problem occurred?

If the answer is yes to the first item above, there is the possibility of a hardware failure, and running the diagnostics is appropriate.

If the answer is yes to one of the last two items above, the problem is probably mechanical, not electrical. Reverify that alignment, configurations, and cable connections are correct before you run the LCQ Advantage MAX diagnostics.

To run the LCQ Advantage MAX diagnostics, proceed as follows:

1. Tune the ring electrode and octapole RF voltages as described in the topic **Tuning the Ring Electrode and Octapole RF Voltages** on page 4-34 in the **LCQ Advantage MAX MS Detector Maintenance** chapter.
2. In the Tune Plus window, choose **Diagnostics > Diagnostics**. (To open Tune Plus, choose **Start > Programs > Xcalibur > LCQ Tune**.) The Diagnostics dialog box appears. See Figure 7-1.
3. Select one of the following options (refer to Table 7-1):
   - To test all of the electronic subsystems (that is, the vacuum system, power supplies, lenses, ion detection system, and RF voltage electronics), click on the **All** tab and select the **Everything** option.
   - To test an individual subsystem, click on the tab corresponding to that subsystem and select the appropriate options. Refer to Table 7-2 for more information on these options.

4. Select how many times you want to run the tests, and whether or not you want to print reports or to stop on a failure.
5. Click on the **Start** button to start the diagnostics.

LCQ Advantage MAX starts testing and displays a chronological log of all diagnostic tests in the Testing text box. Once testing for a specific subsystem is completed, LCQ Advantage MAX displays either Pass or Fail in the Results group box. If the LCQ Advantage MAX diagnostics indicates a problem, perform the maintenance procedure indicated by the LCQ Advantage MAX diagnostics, by Thermo Electron San Jose Technical Support, or by a Thermo Electron San Jose Customer Support Engineer. For more information on the LCQ Advantage MAX diagnostics, refer to the LCQ Advantage MAX online Help.

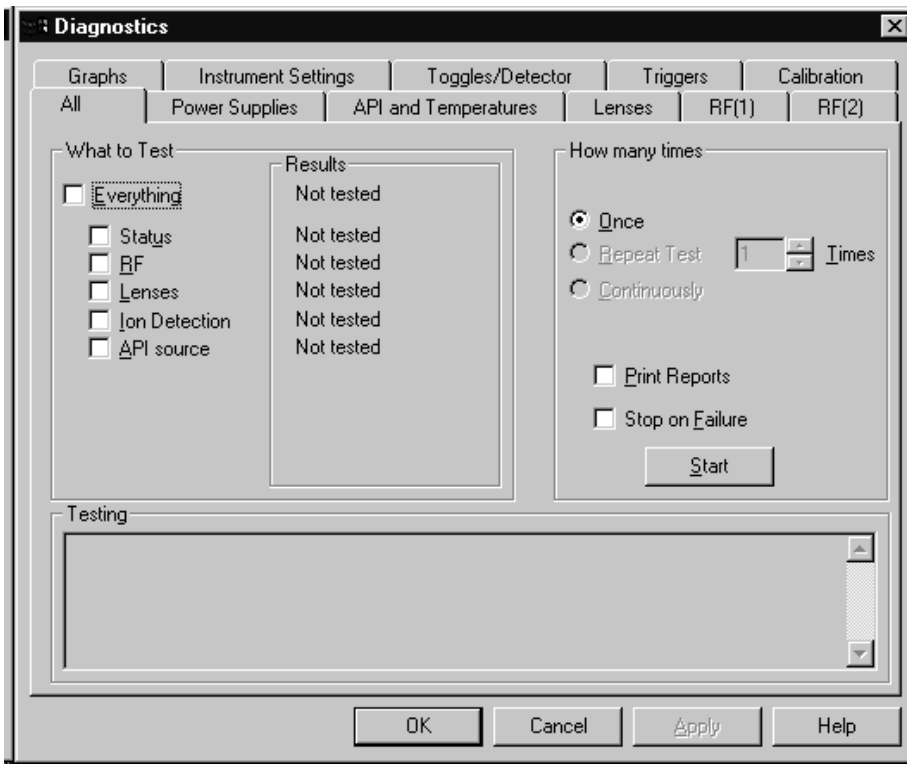

Figure 7-1. Diagnostics dialog box

Table 7-1. Diagnostic tests in Tune Plus

If you Select	Diagnostics will
Everything	test Status, RF, Lenses, Ion Detection, and API source (5 minutes to complete)
Status	check all device static values, refer to Table 7-2
RF	test five RF devices, refer to Table 7-2
Lenses	test four LENSES devices, refer to Table 7-2
Ion Detection	test three ION DETECTION devices, refer to Table 7-2
API source	test three API source devices, refer to Table 7-2

Table 7-2. Diagnostic items tested in Tune Plus

Item Tested in What to Test Group Box	Scanning Device Number in Graph View	Scanning Device Name
Status	n/a	Refer to Table A-1 in the Appendix for static details
RF-1	03 (readback number 06)	Aux amplitude (V) 0 to 83.2
RF-2	10	Main RF DAC (16-bit) 0 to 65535
RF-3	11 (readback number 50)	Vernier det. RF amp (V) 0 to 65535
RF-4	11 (readback number 51)	Vernier RF DAC (16-bit) 0 to 65535
RF-5	25 (readback number 52)	Octapole RF DAC (V) 0 to 1000
Lenses-1	30	Octapole 1 offset (V) -132 to 132
Lenses-2	01	Octapole 2 offset (V) -132 to 132
Lenses-3	07	Octapole lens (V) -136 to 136
Lenses-4	25	Octapole det. RF amp. (V) 0 to 1000
Ion Detection-1	04	Trap Offset (V) -132 to 132
Ion Detection-2	17	Tube gate (V) -200 to 198
Ion Detection-3	05 (readback number 41)	Multiplier (V) 0 to -2200
API-1	20	Auxiliary gas flow (arb) 0 to 60
API-2	19	Sheath gas flow (arb) 20 to 100
API-3	23	Ion Transfer Capillary Voltage (V) -132 to 132

7.2 Replacing a Fuse

Fuses protect the various circuits by opening the circuits whenever overcurrent occurs. On the MS detector the fuses are located on the System Control PCB and the RF Voltage Amplifier PCB. The function and current rating of the various fuses are listed in Table 7-3.

Check fuses when power is lost to a fused subsystem.

CAUTION. Always place the electronics service switch in the Service position (or shut down the system and disconnect the power cord) before you replace fuses on the System Control PCB or RF Voltage Amplifier PCB.

Table 7-3. MS detector fuses

Location	Fuse	Circuit	Description	P/N
RF Voltage Amplifier PCB	F1	+36 V	1.0 A, quick act, 5 x 20 mm, 250 V	00006-07610
RF Voltage Amplifier PCB	F2	-28 V	0.5 A, quick act, 5 x 20 mm, 250 V	00006-07608
System Control PCB	F5	Ion transfer capillary heater	3.15 A, Type F, 5 x 20 mm, 250 V	00006-10510
System Control PCB	F3, F4	APCI vaporizer heater	2.5 A, time lag, 5 x 20 mm, 250 V	00006-10510

Caution. Use only the fuses specified in Table 7-3. Never replace a fuse with a fuse of a different type, voltage, or current rating.

To replace a fuse on the System Control PCB or RF Voltage Amplifier PCB, proceed as follows:

1. Place the electronics service switch in the Service position (or shut down and vent the LCQ Advantage MAX system as described in the topic **Shutting Down the System Completely** in the **System Shutdown, Startup, and Reset** chapter).

CAUTION. Make sure that the LCQ Series MS detector electronic service switch is in the Service position (or shut down the system and disconnect the power cord) before you proceed.

   - To replace a fuse on the System Control PCB, go to step 2.
   - To replace a fuse on the RF Voltage Amplifier PCB, go to step 3.

2. To replace a fuse on the System Control PCB, proceed as follows. See Figure 7-2 on page 7-7 for the location of the System Control PCB and its fuses.

a. Open the front door of the MS detector by loosening the 1/4-in. Allen screw on the right side of the door with an Allen wrench. Be careful not to damage any fused silica tubing leading to the API source.

b. Remove the right side cover of the MS detector as follows:

   i. Loosen the screw that secures the right side cover to the chassis of the MS detector.

   ii. Slide the side cover forward, and then lift it out and away from the MS detector.

c. Remove the protective cover on the System Control PCB.

> **Caution.** To prevent damage to the electronics due to electrostatic discharge, attach an electrostatic discharge (ESD) strap to your wrist before continuing.

d. Locate and replace the defective fuse on the System Control PCB with a fuse of the same type, voltage, and current rating. Refer to Table 7-3.

e. Reinstall the protective cover over the System Control PCB.

f. Reinstall the right side cover of the MS detector as follows:

   i. Slide the side cover back through the guide slots.

   ii. Tighten the screw that secures the side cover to the chassis of the MS detector. Go to step 4.

3. To replace a fuse on the RF Voltage Amplifier PCB, proceed as follows. See Figure 7-5 on page 7-14 for the location of the RF Voltage Amplifier PCB.

   a. Open the front door of the MS detector by loosening the 1/4-in. Allen screw on the right side of the door with an Allen wrench. Be careful not to damage any fused silica tubing leading to the API source.

   b. Remove the top cover of the MS detector as follows:

      i. Loosen the two fasteners that hold the top cover to the MS detector chassis. The fasteners are located in the upper right and left corners of the chassis.

      ii. Slide the top cover forward by about 1.2 cm (0.5 in.).

      iii. With one hand under the center of the top cover, lift the top cover up and away from the MS detector.

   c. With a Phillips screwdriver, loosen the eight screws that hold the metal cover to the RF Voltage Amplifier PCB. Remove the cover.

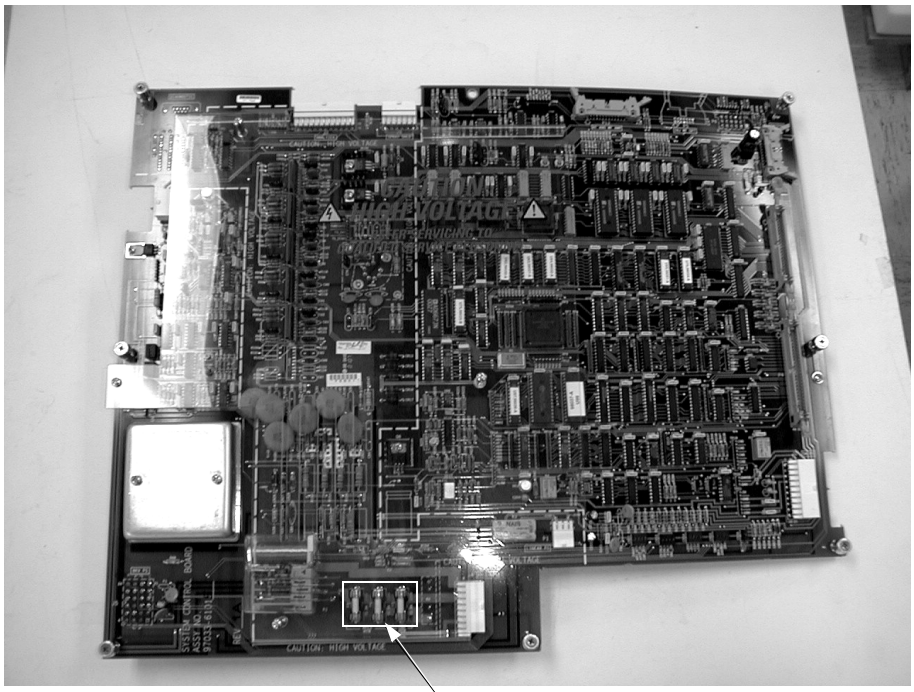

Figure 7-2. System Control PCB, showing the location of the fuses

d. Locate and replace the defective fuse on the RF Voltage Amplifier PCB with a fuse of the same type, voltage, and current rating. Refer to Table 7-3.

e. Place the metal cover over the RF Voltage Amplifier PCB. With a Phillips screwdriver, tighten the eight screws that secure the cover.

f. Reinstall the top cover of the MS detector as follows:

   i. With one hand under the center of the top cover, place the top cover over the MS detector such that the front of the cover is about 1.2 cm (0.5 in.) in front of the front of the MS detector.

   ii. Slide the cover back until it is flush with the front doors (when they are closed).

   iii. Tighten with a Phillips screwdriver the two fasteners to secure the top cover to the chassis.

4. Close the front door of MS detector. Tighten the 1/4-in. Allen screw on the right side of the door with an Allen wrench.

5. Place the electronics service switch in the Operational position.

6. Run the LCQ Advantage MAX diagnostics to verify that the system is operational.

7.3 Replacing PCBs and Assemblies in the MS Detector

PCBs and assemblies in the MS detector for which replacement procedures are presented in this chapter can be categorized as follows:

- Power supplies that are in the electronics tower
- PCBs that are in the embedded computer
- PCBs and assemblies that are accessible from the top of the MS detector
- PCBs and assemblies that are accessible from the right side of the MS detector
- PCBs and assemblies that are accessible from the left side of the MS detector

CAUTION. With the electronics service switch in the Service position, the system is still under vacuum. Power is still supplied to the forepump, +48, +24 V dc switching power supply, Turbomolecular Pump Controller, turbomolecular pump, turbomolecular pump fan, embedded computer fan, tower fan, vent valve, and Vent Delay PCB. Thus, before these components can be serviced, the main power circuit breaker switch must be placed in the OFF (O) position and the power cord must be unplugged from the power outlet.

Caution. Never insert a test probe (for example, an oscilloscope probe) into the sockets of female cable connectors on PCBs. This can damage the sockets.

Replacing Power Supplies in the Tower

The following power supplies are installed in the tower. See Figure 7-3.

- +36 V, -28 V dc switching power supply
- +5 V, ±15 V, +24 V dc switching power supply
- +48, +24 switching power supply
- ± 210 V linear power supply

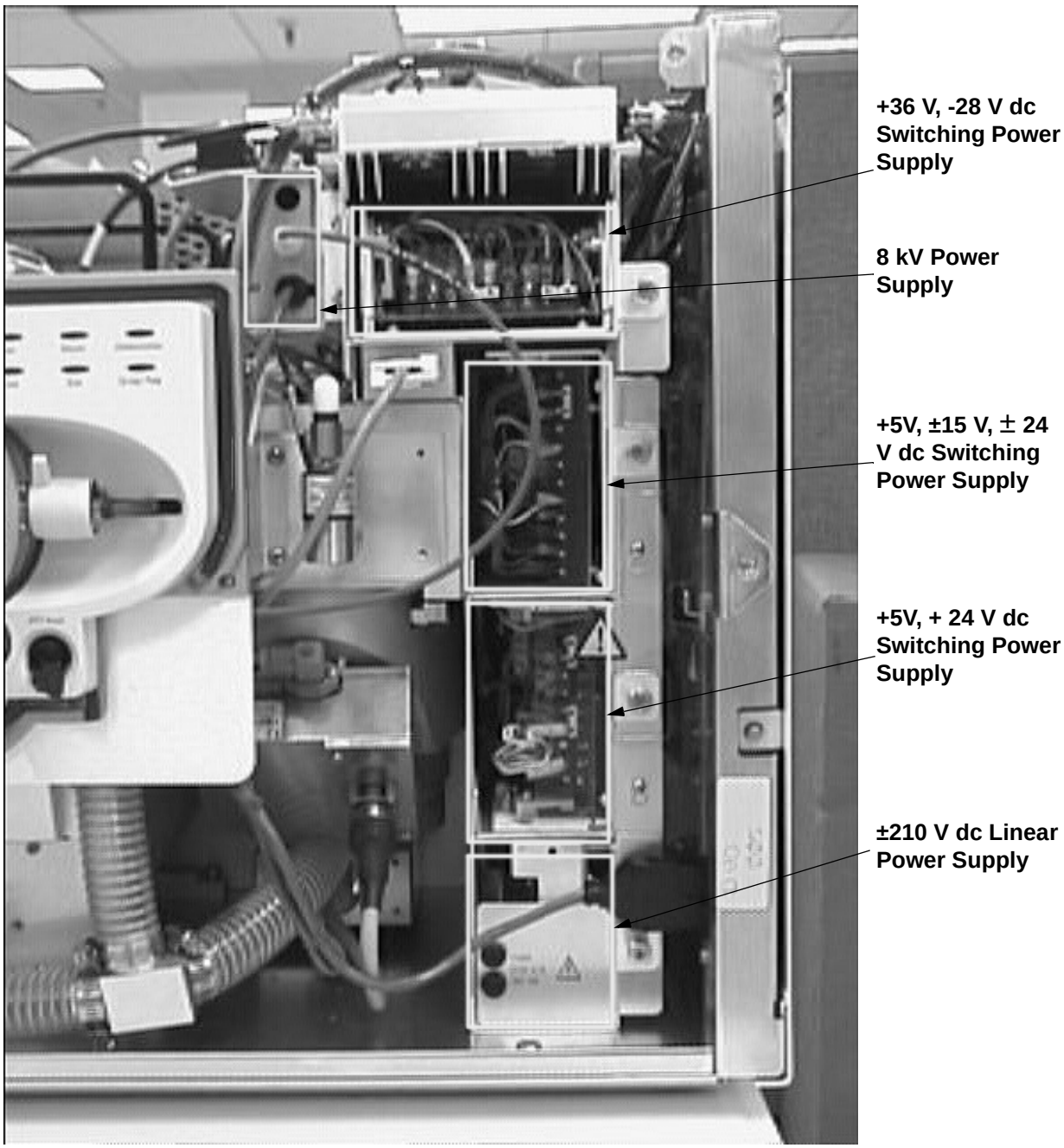

Figure 7-3. Power supplies in the electronics tower

To replace the +36, -28 V dc switching power supply (P/N 97033-60022), +5 V, ±15 V, +24 V dc switching power supply (P/N 97033-60021), +48, +24 V dc switching power supply (P/N 97133-60060), or the ±210 V dc linear power supply (P/N 97033-60024), proceed as follows:

1. Shut down and vent the system as described in the topic **Shutting Down the System Completely** in the **System Shutdown, Startup, and Reset** chapter.

CAUTION. Make sure that the LCQ Advantage MAX power cord is unplugged before you proceed.

2. Open the front door of the MS detector by loosening the 1/4-in. Allen screw on the right side of the door with an Allen wrench. Be careful not to damage any fused silica tubing leading to the API source.
3. If necessary, remove the cover to the +48, +24 V dc switching power supply.
4. The power supplies in the tower have bulkhead connectors on the back. To remove a power supply, loosen the fastener that holds it to the chassis and then carefully tug on the power supply to remove it as a module.
5. Unpack the new power supply. Retain the packing materials so that you can pack and ship the defective switching power supply assembly to the Thermo Electron San Jose Repair Center. **Be sure to note the apparent problem or symptoms on the enclosed forms.**
6. Slide the new power supply into the space occupied by the old power supply. Push carefully on the power supply to seat the connectors in the rear.
7. Tighten with a Phillips screwdriver the fastener that holds the power supply to the tower.
8. Reinstall the plastic cover to the +48, +24 V dc switching power supply if you removed it earlier.
9. Close the front door of the MS detector. Tighten the 1/4-in. Allen screw on the right side of the door with an Allen wrench.
10. Restart the system as described in the topic **Starting Up the System After a Complete Shutdown** in the **System Shutdown, Startup, and Reset** chapter.
11. Run the LCQ Advantage MAX diagnostics to verify that the system is operational.

Replacing PCBs in the Embedded Computer

The Ethernet PCB (P/N 97000-60165), Support PCB (P/N 97033-61020), Acquisition DSP PCB (P/N 97000-61260), Control DSP PCB (P/N 97000-61270), and Waveform DDS PCB (P/N 97000-61280) reside in the embedded computer. The RS 232/485 Converter PCB (P/N 97033-61110) plugs into a serial port on the right side of the embedded computer. See Figure 7-4. (Refer to Figure 7-5 on page 7-14 for the location of the embedded computer)

To replace a PCB in the embedded computer, proceed as follows:

1. Place the electronics service switch in the Service position (or shut down and vent the LCQ Advantage MAX system as described in the topic **Shutting Down the System Completely** in the **System Shutdown, Startup, and Reset** chapter).

CAUTION. Make sure that the LCQ Advantage MAX electronic service switch is in the Service position (or shut down or shut down the system and disconnect the power cord) before you proceed.

2. Open the front door of the MS detector.
3. Remove the top cover of the MS detector as follows:
   a. Loosen the two fasteners that hold the top cover to the MS detector chassis. The fasteners are located in the upper right and left corners of the chassis.
   b. Slide the top cover forward by about 1.2 cm (0.5 in.).
   c. With one hand under the center of the top cover, lift the top cover up and away from the MS detector.
4. Disconnect the embedded computer fan cable from the front of the embedded computer.
5. Loosen the knurled fastener that holds the front cover to the embedded computer. Remove the front cover of the embedded computer.
6. Locate the PCB you want to replace. See Figure 7-4.
7. Disconnect all electrical cables to the PCB that you want to replace.
8. With a Phillips screwdriver, turn the screw on the retainer bracket counterclockwise one half turn. Remove the retainer bracket.

Caution. To prevent damage to the electronics due to electrostatic discharge, attach an electrostatic discharge (ESD) strap to your wrist before continuing.

9. Unseat the PCB from the mainboard and pull it out of the embedded computer.

10. Unpack the new PCB. Retain the packing materials so that you can pack and ship the defective PCB to the Thermo Electron San Jose Repair Center. **Be sure to note the apparent problem or symptoms on the enclosed forms.**
11. Seat the new PCB in the mainboard.

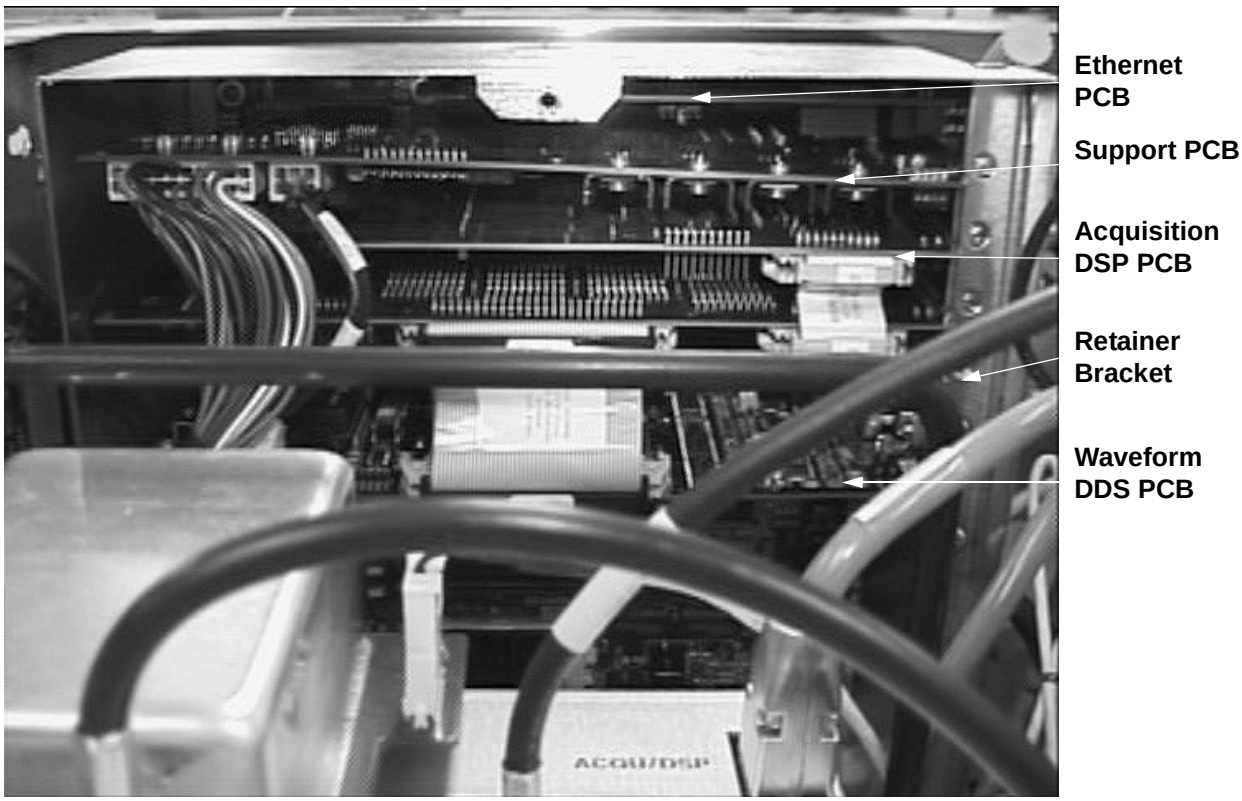

Figure 7-4. Embedded computer (with front cover removed)

12. Reinstall the retainer bracket that holds the PCBs in place. With a Phillips screwdriver, tighten the retainer bracket screw.
13. Reconnect all electrical cables to the PCB that you replaced.
14. Reinstall the front cover of the embedded computer. Tighten with a Phillips screwdriver the knurled fastener that holds the front cover to the embedded computer.
15. Reattach the fan cable to the front of the embedded computer.
16. Reinstall the top cover of the MS detector as follows:
    a. With one hand under the center of the top cover, place the top cover over the MS detector such that the front of the cover is about 1.2 cm (0.5 in.) in front the front of the MS detector.

b. Slide the cover back until it is flush with the front doors (when they are closed).

c. Tighten with a Phillips screwdriver the two fasteners to secure the top cover to the chassis.

17. Close the front door of the MS detector. Tighten the 1/4-in. Allen screw on the right side of the door with an Allen wrench.
18. Place the electronics service switch in the Operational position.
19. Run the LCQ Advantage MAX diagnostics to verify that the system is operational.

Replacing the Vent Delay PCB

The Vent Delay PCB can be accessed from the top of the MS detector. See Figure 7-5.

CAUTION. The LCQ Advantage MAX system must be shut down and the power cord unplugged before you service the Vent Delay PCB.

To replace the Vent Delay PCB, proceed as follows:

1. Shut down and vent the system as described in the topic **Shutting Down the System Completely** in the **System Shutdown, Startup, and Reset** chapter.

CAUTION. Make sure that the LCQ Advantage MAX power cord is unplugged before you proceed.

2. Open the front door of the MS detector by loosening the 1/4-in. Allen screw on the right side of the door with an Allen wrench. Be careful not to damage any fused silica tubing leading to the API source.
3. Remove the top cover of the MS detector as follows:

   a. Loosen the two fasteners that hold the top cover to the MS detector chassis. The fasteners are located in the upper right and left corners of the chassis.

   b. Slide the top cover forward by about 1.2 cm (0.5 in.).

   c. With one hand under the center of the top cover, lift the top cover up and away from the MS detector.
4. On the Vent Delay PCB, disconnect at J1 the cable to the vent valve.
5. Disconnect at J2 the cable to the power supply.
6. With a Phillips screwdriver, loosen the four screws that secure the Vent Delay PCB to the MS detector chassis. Remove the Vent Delay PCB.

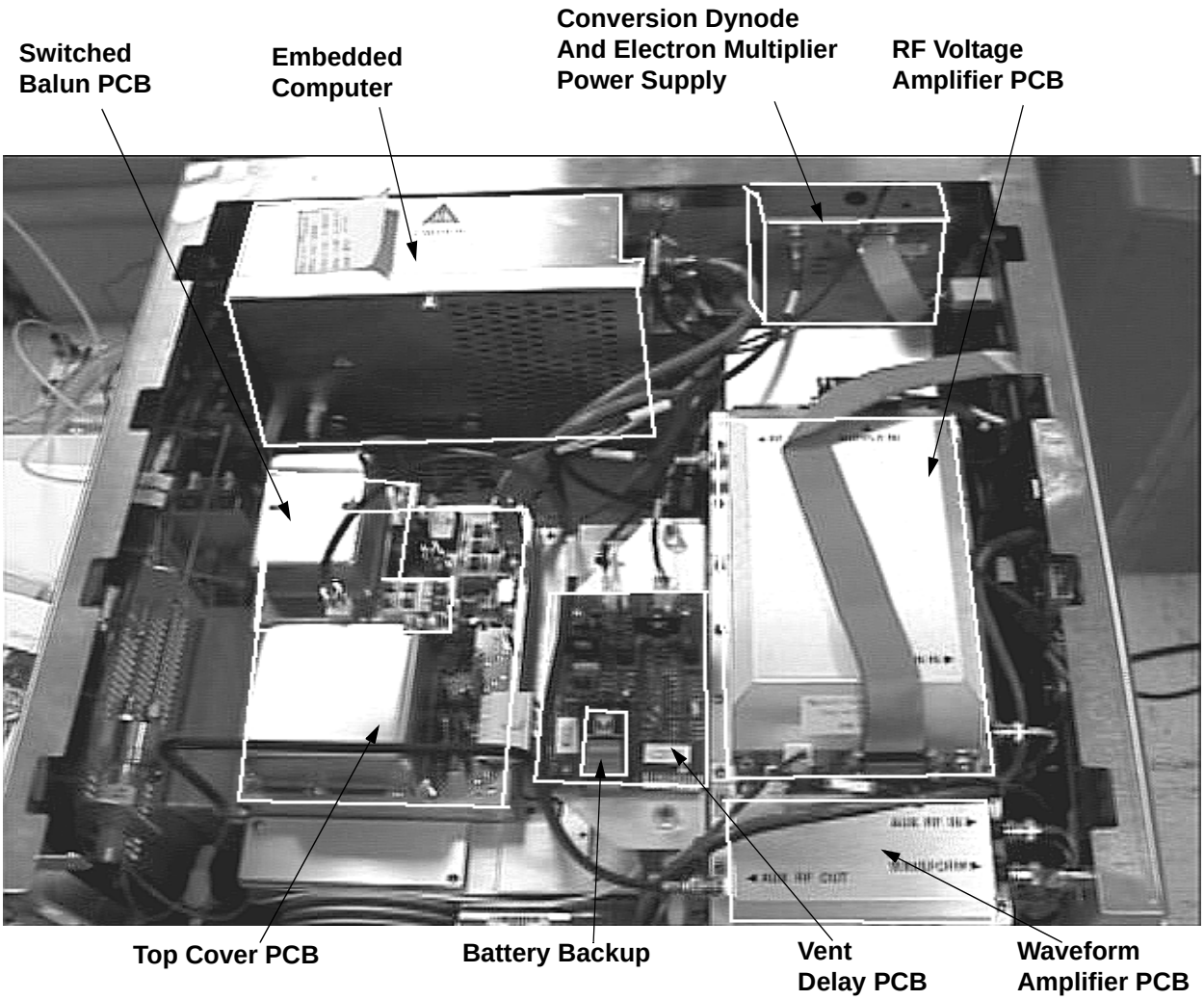

Figure 7-5. PCBs and assemblies that are accessible from the top of the MS detector

7. Unpack the new Vent Delay PCB (P/N 97000-61370). Retain the packing materials so that you can pack and ship the defective PCB to the Thermo Electron San Jose Repair Center. **Be sure to note the apparent problem or symptoms on the enclosed forms.**
8. Replace the battery (P/N 00301-05720) if necessary.
9. Position the new Vent Delay PCB in the space that was occupied by the old PCB.
10. With a Phillips screwdriver, tighten the four screws that secure the Vent Delay PCB.
11. Reconnect at J1 the cable that goes to the vent valve.
12. Reconnect at J2 the cable that comes from the power supply.

13. Reinstall the top cover of the MS detector as follows:
    a. With one hand under the center of the top cover, place the top cover over the MS detector such that the front of the cover is about 1.2 cm (0.5 in.) in front the front of the MS detector.
    b. Slide the cover back until it is flush with the front doors (when they are closed).
    c. Tighten with a Phillips screwdriver the two fasteners to secure the top cover to the chassis.
14. Close the front door of the MS detector. Tighten the 1/4-in. Allen screw on the right side of the door with an Allen wrench.
15. Restart the system as described in the topic **Starting Up the System After a Complete Shutdown** in the **System Shutdown, Startup, and Reset** chapter.
16. Run the LCQ Advantage MAX diagnostics to verify that the system is operational.

Replacing the Electron Multiplier and Conversion Dynode Power Supply, Switched Balun PCB, Top Cover PCB, Waveform Amplifier PCB, RF Voltage Amplifier PCB, 8 kV Power Supply, and Battery Backup

The electron multiplier and conversion dynode power supply, Switched Balun PCB, Top Cover PCB, Waveform Amplifier PCB, RF Voltage Amplifier PCB, 8 kV power supply, and battery (battery backup) are accessible from the top of the MS detector. See Figure 7-5 on page 7-14.

To replace the electron multiplier power supply, conversion dynode power supply, Top Cover PCB, Switched Balun PCB, Waveform Amplifier PCB, RF Voltage Amplifier PCB, or battery (battery backup), proceed as follows:

1. Place the electronics service switch in the Service position (or shut down and vent the LCQ Advantage MAX system as described in the topic Shutting **Down the System Completely** in the **System Shutdown, Startup, and Reset** chapter).

CAUTION. Make sure that the LCQ Advantage MAX electronic service switch is in the Service position (or shut down the system and disconnect the power cord) before you proceed.

2. Open the front door of the MS detector by loosening the 1/4-in. Allen screw on the right side of the door with an Allen wrench. Be careful not to damage any fused silica tubing leading to the API source.

3. Remove the top cover of the MS detector as follows:
   a. Loosen the two fasteners that hold the top cover to the MS detector chassis. The fasteners are located in the upper right and left corners of the chassis.
   b. Slide the top cover forward by about 1.2 cm (0.5 in.).
   c. With one hand under the center of the top cover, lift the top cover up and away from the MS detector.
   d. Choose one of the following:
      - To replace the electron multiplier power and conversion dynode power supply, go to step 4.
      - To replace the Switched Balun PCB, go to step 5.
      - To replace the Top Cover PCB, go to step 6.
      - To replace the Waveform Amplifier PCB, go to step 7.
      - To replace the RF Voltage Amplifier PCB, go to step 8.
      - To replace the 8 kV power supply, go to step 9.
      - To replace the battery (battery backup) on the Vent Delay PCB, go to step 10.
4. To replace the electron multiplier / conversion dynode power supply, proceed as follows. See Figure 7-5 on page 7-14 for the location of the electron multiplier and conversion dynode power supply.
   a. Disconnect the conversion dynode high voltage cable at the conversion dynode feedthrough by pulling it free from the feedthrough.
   b. Disconnect the electron multiplier high voltage cable at the electron multiplier power supply.
   c. Disconnect from the front of the electron multiplier and conversion dynode power supply the electrical cable that comes from the System Control PCB.
   d. Loosen by hand or with a Phillips screwdriver the two fasteners that hold the electron multiplier and conversion dynode power supply module to the MS detector chassis.
   e. Carefully lift the electron multiplier and conversion dynode power supply module up and away from the MS detector.
   f. Unpack the new power supply (P/N 97000-98042). Retain the packing materials so that you can pack and ship the defective power supply module or PCB to the Thermo Electron San Jose Repair Center. **Be sure to note the apparent problem or symptoms on the enclosed forms.**

g. Install the new electron multiplier and conversion dynode power supply module in the space occupied by the old power supply module.

h. Tighten with a Phillips screwdriver the two fasteners that hold the electron multiplier and conversion dynode power supply module to the MS detector chassis.

i. Reconnect to the electron multiplier and conversion dynode power supplies the electrical cable that comes from the System Control PCB.

j. Reconnect the electron multiplier high voltage cable to the power supply.

k. Reconnect the conversion dynode high voltage cable to the conversion dynode feedthrough. Go to step 11.

5. To replace the Switched Balun PCB, proceed as follows. See Figure 7-5 on page 7-14 for the location of the Switched Balun PCB.

   a. Disconnect from the Switched Balun PCB (at J1) the endcaps RF / octapole RF coaxial cable that comes from the Waveform Amplifier PCB.

   b. Disconnect from the Switched Balun PCB (at P1) the endcaps dc offset cable.

   c. With a Phillips screwdriver, remove the screws that hold the Switched Balun PCB to the standoffs on the top cover plate of the vacuum manifold. Remove the PCB.

   d. Unpack the new Switched Balun PCB (P/N 97033-61060). Retain the packing materials so that you can pack and ship the defective PCB to the Thermo Electron San Jose Repair Center. **Be sure to note the apparent problem or symptoms on the enclosed forms.**

   e. Align the new Switched Balun PCB with the standoffs.

   f. With a Phillips screwdriver, reinstall the screws that hold the Switched Balun PCB to the standoffs on the top cover plate.

   g. Reconnect to the Switched Balun PCB (at J1) the endcaps RF / octapole RF coaxial cable that comes from the Waveform Amplifier PCB.

   h. Reconnect to the Switched Balun PCB (at P1) the endcaps dc offset cable. Go to step 11.

6. To replace the Top Cover PCB, proceed as follows. See Figure 7-5 on page 7-14 for the location of the Top Cover PCB.

   a. Remove the Switched Balun PCB as described in steps 5a through 5c.

   b. Disconnect the electron multiplier high voltage coaxial cable that comes from the electron multiplier power supply.

c. Disconnect from the Top Cover PCB (at ACQU/DSP) the electrometer cable. (If necessary, use a small screw driver to loosen the screws that secure the cable.)

d. Disconnect from the Top Cover PCB (at ANALYZER) the lenses / octapole dc offsets cable that comes from the System Control PCB.

e. With a Phillips screwdriver, remove the metal cover from the Top Cover PCB.

f. With a Phillips screwdriver, remove the screws that hold the Top Cover PCB to the top cover plate of the vacuum manifold.

g. Remove the standoffs

Caution. To prevent damage to the electronics due to electrostatic discharge, attach an electrostatic discharge (ESD) strap to your wrist before continuing.

h. Unseat and remove the Top Cover PCB from the top cover plate.

i. Unpack the new Top Cover PCB (P/N 97033-62060). Retain the packing materials so that you can pack and ship the defective PCB to the Thermo Electron San Jose Repair Center. **Be sure to note the apparent problem or symptoms on the enclosed forms.**

j. Carefully align and seat the new Top Cover PCB into the 8-pin and 4-pin feedthroughs on the top cover plate.

k. With a Phillips screwdriver, reinstall the screws and standoffs that hold the Top Cover PCB to the top cover plate.

l. With a Phillips screwdriver, reinstall the metal cover.

m. Reinstall the Switched Balun PCB as described in steps 5e and f.

n. Reinstall the two cables to the Switched Balun PCB (steps 5g and 5h).

o. Reconnect the lenses / octapole dc offsets cable that comes from the System Control PCB

p. Reconnect the electron multiplier high voltage coaxial cable that comes from the electron multiplier power supply.

q. Reconnect the electrometer cable. Go to step 11.

7. To replace the Waveform Amplifier PCB, proceed as follows. See Figure 7-5 on page 7-14 for the location of the Waveform Amplifier PCB.

   a. Disconnect all cables to the Waveform Amplifier PCB.

Caution. To prevent damage to the electronics due to electrostatic discharge, attach an electrostatic discharge (ESD) strap to your wrist before continuing.

b. With a Phillips screwdriver, remove the metal cover from the Waveform Amplifier PCB.

c. With a Phillips screwdriver, remove the screws that secure the Waveform Amplifier PCB to the top of the tower. Remove the Waveform Amplifier PCB.

d. Unpack the new Waveform Amplifier PCB (P/N 96000-61110). Retain the packing materials so that you can pack and ship the defective PCB to the Thermo Electron San Jose Repair Center. **Be sure to note the apparent problem or symptoms on the enclosed forms.**

e. Install the new PCB in the place occupied by the old PCB.

f. With a Phillips screwdriver, reinstall the screws that secure the Waveform Amplifier PCB to the top of the tower.

g. Reinstall the metal cover to the top of the Waveform Amplifier PCB.

h. Reconnect all cables to the Waveform Amplifier PCB that you disconnected in step 7a. Go to step 11.

8. To replace the RF Voltage Amplifier PCB, proceed as follows:

a. Disconnect all cables that go to the RF Voltage Amplifier PCB.

> **Caution.** To prevent damage to the electronics due to electrostatic discharge, attach an electrostatic discharge (ESD) strap to your wrist before continuing.

b. With a Phillips screwdriver, remove the metal cover from the RF Voltage Amplifier PCB.

c. With a Phillips screwdriver, remove the screws that secure the RF Voltage Amplifier PCB to the top of the tower. Remove the RF Voltage Amplifier PCB.

d. Unpack the new RF Voltage Amplifier PCB (P/N 97000-61090). Retain the packing materials so that you can pack and ship the defective PCB to the Thermo Electron San Jose Repair Center. **Be sure to note the apparent problem or symptoms on the enclosed forms.**

e. Install the new PCB in the place occupied by the old PCB.

f. With a Phillips screwdriver, reinstall the screws that secure the RF Voltage Amplifier to the top of the tower.

g. Reinstall the metal cover to the top of the RF Voltage Amplifier PCB.

h. Reconnect all cables to the RF Voltage Amplifier PCB that you disconnected in step 8a. Go to step 11.

9. To replace the 8 kV power supply, proceed as follows. See Figure 7-3 on page 7-9 for the location of the 8 kV power supply.
   a. Disconnect from the 8 kV power supply the thin cable that comes from the API panel.
   b. Disconnect from the rear of the System Control PCB (at J5), the thick cable that goes from the 8 kV power supply to the System Control PCB.
   c. Loosen by hand (or with a Phillips screwdriver) the two fasteners that hold the 8 kV power supply to the tower.
   d. Remove the 8 kV power supply.
   e. Unpack the new 8 kV power supply (P/N 97000-60142). Retain the packing materials so that you can pack and ship the defective 8 kV power supply to the Thermo Electron San Jose Repair Center. **Be sure to note the apparent problem or symptoms on the enclosed forms.**
   f. Reinstall the new 8 kV power supply in the space occupied by the old power supply.
   g. Tighten by hand the two fasteners that hold the 8 kV power supply to the tower (underneath the Vent Control PCB).
   h. Reconnect to the rear of the System Control PCB (at J5) the thick cable that comes from the 8 kV power supply.
   i. Reconnect to the 8 kV power supply the thin cable that comes from the API panel. Go to step 11.
10. To replace the battery on the Vent Delay PCB, proceed as follows. See Figure 7-5 on page 7-14 for the location of the battery.
   a. Remove the battery from the Vent Delay PCB.
   b. Reinstall a new battery (P/N 00301-05720) in the place occupied by the old battery.
11. Reinstall the top cover of the MS detector as follows:
   a. With one hand under the center of the top cover, place the top cover over the MS detector such that the front of the cover is about 1.25 cm (0.5 in.) in front the front of the MS detector.
   b. Slide the cover back until it is flush with the front doors (when they are closed).
   c. Tighten with a Phillips screwdriver the two fasteners to secure the top cover to the chassis.
12. Close the front door of the MS detector. Tighten the 1/4-in. Allen screw on the right side of the door with an Allen wrench.
13. Place the electronics service switch in the Operational position.

14. Run the LCQ Advantage MAX diagnostics to verify that the system is operational.

Replacing the System Control PCB

To replace the System Control PCB, proceed as follows. See Figure 7-2 on page 7-7 for the location of the System Control PCB.

1. Place the electronics service switch in the Service position (or shut down and vent the LCQ Advantage MAX system as described in the topic **Shutting Down the System Completely** in the **System Shutdown, Startup, and Reset** chapter).

CAUTION. Make sure that the LCQ Advantage MAX electronic service switch is in the Service position (or shut down or shut down the system and disconnect the power cord) before you proceed.

2. Open the front door of the MS detector by loosening the 1/4-in. Allen screw on the right side of the door with an Allen wrench. Be careful not to damage any fused silica tubing leading to the API source.
3. Remove the top cover of the MS detector as follows:
   a. Loosen the two fasteners that hold the top cover to the MS detector chassis. The fasteners are located in the upper right and left corners of the chassis.
   b. Slide the top cover forward by about 1.2 cm (0.5 in.).
   c. With one hand under the center of the top cover, lift the top cover up and away from the MS detector.
4. Remove the right side cover of the MS detector as follows:
   a. Loosen the screw that secures the right side cover to the chassis of the MS detector.
   b. Slide the side cover forward, and then lift it out and away from the MS detector.

5. Disconnect all cables to the System Control PCB. The following cables are connected to the System Control PCB:
   - LC I/O (P4)
   - RF control (P8)
   - RF and waveform amplifiers (P12)
   - Linear power supply (P1)
   - Spray shield (J6)
   - Analyzer (J3)
   - Ion gauge / Convectron gauge (P9)
   - Switching power supplies (J2)
   - Electron multiplier / conversion dynode power supplies (P3)
   - APCI heater (J4)
   - High speed serial (P6, backside)
   - 8 kV power supply (J5, backside)
6. With a Phillips screwdriver, loosen the seven fasteners that hold the System Control PCB to the MS detector chassis.

Caution. To prevent damage to the electronics due to electrostatic discharge, attach an electrostatic discharge (ESD) strap to your wrist before continuing.

7. Carefully lift the System Control PCB out and away from the MS detector.
8. Unpack the new System Control PCB (P/N 97033-61016). Retain the packing materials so that you can pack and ship the defective PCB to the Thermo Electron San Jose Repair Center. **Be sure to note the apparent problem or symptoms on the enclosed forms.**
9. Use the guide hole at the top center of the PCB and the guide post on the MS detector chassis to position the new System Control PCB in the space occupied by the old PCB.
10. With a Phillips screwdriver, tighten the seven fasteners that hold the System Control PCB to the MS detector chassis.
11. Reconnect all cables to the System Control PCB. The following cables are connected to the System Control PCB:
    - LC I/O (P4)
    - RF control (P8)
    - RF and waveform amplifiers (P12)
    - Linear power supply (P1)

- Spray shield (J6)
- Analyzer (J3)
- Ion gauge / Convectron gauge (P9)
- Switching power supplies (J2)
- Electron multiplier / conversion dynode power supplies (P3)
- APCI heater (J4)
- High speed serial line (P6, backside)
- 8 kV power supply (J5, backside)

12. Reinstall the right side cover of the MS detector as follows:
    a. Slide the side cover back through the guide slots.
    b. Tighten the screw that secures the side cover to the chassis of the MS detector.
13. Reinstall the top cover of the MS detector as follows:
    a. With one hand under the center of the top cover, place the top cover over the MS detector such that the front of the cover is about 1.25 cm (0.5 in.) in front the front of the MS detector.
    b. Slide the cover back until it is flush with the front doors (when they are closed).
    c. Tighten with a Phillips screwdriver the two fasteners to secure the top cover to the chassis.
14. Close the front door of MS detector. Tighten the 1/4-in. Allen screw on the right side of the door with an Allen wrench.
15. Place the electronics service switch in the Operational position.
16. Run the LCQ Advantage MAX diagnostics to verify that the system is operational.

Replacing the RF Voltage Control PCB and the Low Pass Filter PCB

To replace the RF Voltage Control PCB (and its housing) and the Low Pass Filter PCB, proceed as follows. See Figure 7-6 for the location of the RF Voltage Control PCB and the Low Pass Filter PCB.

1. Place the electronics service switch in the Service position (or shut down and vent the LCQ Advantage MAX system as described in the topic **Shutting Down the System Completely** in the **System Shutdown, Startup, and Reset** chapter).

CAUTION. Make sure that the LCQ Advantage MAX electronics service switch is in the Service position (or shut down the system and disconnect the power cord) before you proceed.

2. Open the front door of the MS detector by loosening the 1/4-in. Allen screw on the right side of the door with an Allen wrench. Be careful not to damage any fused silica tubing leading to the API source.

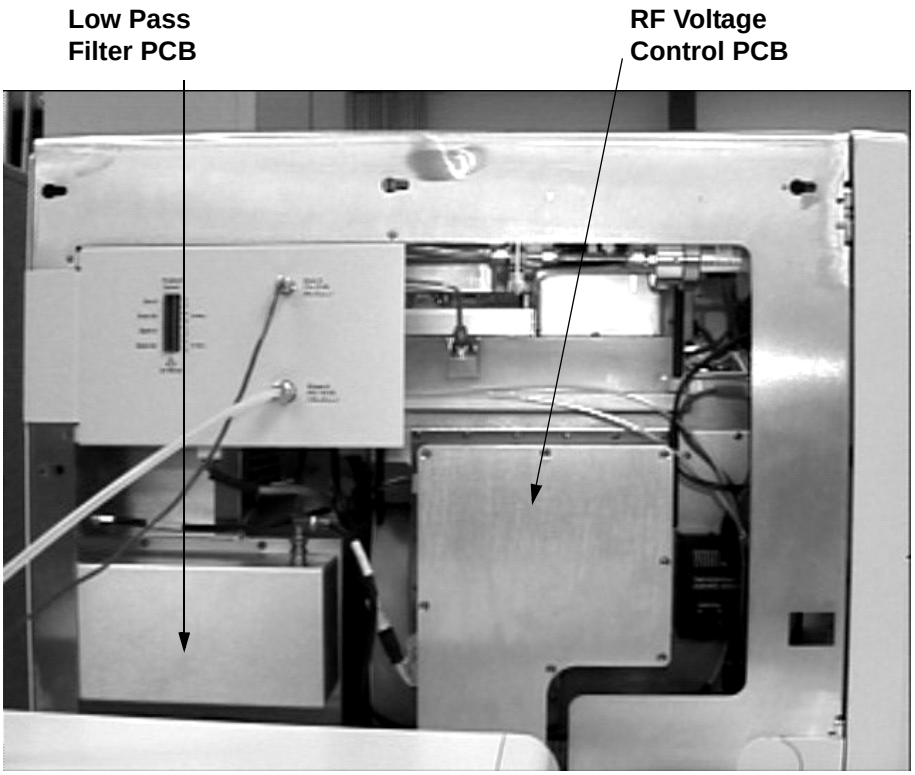

Figure 7-6. Left side of the MS detector, showing the Low Pass Filter PCB and the RF Voltage Control PCB

3. Remove the left side cover of the MS detector as follows:
   a. Loosen the screw that secures the left side cover to the chassis of the MS detector.
   b. Slide the side cover forward, and then lift it out and away from the MS detector.

Caution. To prevent damage to the electronics due to electrostatic discharge, attach an electrostatic discharge (ESD) strap to your wrist before continuing.

- To replace the RF Voltage Amplifier PCB, go to step 4.
- To replace the Low Pass Filter PCB, go to step 5.

4. To replace the RF Voltage Amplifier PCB, proceed as follows:
   a. With a Phillips screwdriver, remove the nine screws that secure the front cover of the RF Voltage Control PCB. Remove the front cover to expose the RF Voltage Control PCB.
   b. Disconnect the cable that comes from the RF Voltage Amplifier PCB.
   c. Disconnect the cable that comes from the System Control PCB.
   d. With a Phillips screwdriver, remove the 21 screws that hold the RF Voltage Control PCB housing to the vacuum manifold. Remove the RF Voltage Control PCB and its housing as a unit. Reinstall the cover plate on the housing.
   e. Unpack the new RF Voltage Control PCB and housing (P/N 96000-61100). Retain the packing materials so that you can pack and ship the defective PCB and housing to the Thermo Finnigan Repair Center in San Jose. **Be sure to note the apparent problem or symptoms on the enclosed forms.**
   f. Position the new RF Voltage Control PCB and its housing against the vacuum manifold where the old assembly was located. With a Phillips screwdriver, reinstall the 21 screws that hold the RF Voltage Control PCB housing to the vacuum manifold.
   g. With a Phillips screwdriver, remove the nine screws that hold the front cover of the RF Voltage Control PCB housing to the RF Voltage Control PCB housing. Remove the front cover to expose the RF Voltage Control PCB.
   h. Reconnect the cable that comes from the System Control PCB.
   i. Reconnect the cable that comes from the RF Voltage Amplifier PCB.
   j. Position the front cover over the RF Voltage Control PCB. With a Phillips screwdriver, reinstall the screws that hold the front cover to the RF Voltage Control PCB housing. Go to step 6.
5. To replace the Low Pass Filter PCB, proceed as follows:
   a. Disconnect the two coaxial cables from the BNC connectors on the Low Pass Filter PCB.
   b. With a Phillips screwdriver, remove the 4 screws that hold the metal cover to With a Phillips screwdriver, remove the screws that hold the Low Pass Filter PCB to the MS detector chassis. Remove the Low Pass Filter PCB.
   c. Unpack the new PCB (P/N 97000-61380). Retain the packing materials so that you can pack and ship the defective PCB to the

Thermo Electron San Jose Repair Center. Be sure to note the apparent problem or symptoms on the enclosed forms.

d. Position the new Low Pass Filter PCB in the place that was occupied by the old PCB. With a Phillips screwdriver, reinstall the screws that hold the Low Pass Filter PCB to the MS detector chassis.

e. Position the metal cover over the Low Pass Filter PCB. With a Phillips screwdriver, reinstall the 4 screws that hold the metal cover to the Low Pass Filter PCB.

f. Reconnect the two coaxial cables to the BNC connectors that are located on the rear of the Low Pass Filter PCB.

6. Reinstall the left side cover of the MS detector as follows:

   a. Open the front door completely (180°).

   b. Align the cover with the top and bottom guide slots on the left side of the LCQ Advantage MAX.

   c. Slide the side cover back through the guide slots.

   d. Tighten the screw that secures the side cover to the chassis of the MS detector.

7. Close the front door of MS detector. Tighten the 1/4-in. Allen screw on the right side of the door with an Allen wrench.

8. Place the electronics service switch in the Operational position.

9. Run the LCQ Advantage MAX diagnostics to verify that the system is operational.

Chapter 8
LCQ Deca XP MAX Diagnostics and PCB and Assembly Replacement

Many of the MS detector components can be tested by the LCQ Deca XP MAX diagnostics. Thermo Electron's service philosophy for the LCQ Deca XP MAX system calls for troubleshooting to the lowest part, assembly, PCB, or module listed in the **Replaceable Parts** chapter. You should replace LCQ Deca XP MAX components when indicated by the LCQ Deca XP MAX diagnostics, by Thermo Electron San Jose Technical Support, or by a Thermo Electron San Jose Customer Support Engineer.

This chapter contains the following sections:

- Running the LCQ Deca XP MAX Diagnostics
- Replacing a Fuse
- Replacing PCBs and Assemblies in the MS Detector

8.1 Running the LCQ Deca XP MAX Diagnostics

The LCQ Deca XP MAX diagnostics system is used to test the major electronic circuits within the instrument and indicate whether the circuits pass or fail the tests. If there is a problem with the instrument electronics, the LCQ Deca XP MAX diagnostics can often locate the problem. You can then often correct the problem yourself by replacing a faulty PCB or assembly.

The LCQ Deca XP MAX diagnostics does not diagnose problems that are not electrical in nature. For example, it does not diagnose poor sensitivity due to misaligned or dirty components or to improper tuning. Therefore, it is important to have someone who is familiar with system operation and basic hardware theory run the diagnostics and use it to assist in isolating any problems.

Before running the diagnostics, you should consider the following:

- Did the system fail when you were running samples?
- Did problems occur after you performed maintenance on the instrument, data system, or peripherals?
- Did you change the system's configuration, cables, or peripherals just before the problem occurred?

If the answer is yes to the first item above, there is the possibility of a hardware failure, and running the diagnostics is appropriate.

If the answer is yes to one of the last two items above, the problem is probably mechanical, not electrical. Reverify that alignment, configurations, and cable connections are correct before you run the LCQ Deca XP MAX diagnostics.

To run the LCQ Deca XP MAX diagnostics, proceed as follows:

1. Tune the ring electrode and octapole RF voltages as described in the topic **Tuning the Ring Electrode and Octapole RF Voltages** on page 5-34 in the **LCQ Deca XP MAX MS Detector Maintenance** chapter.
2. In the Tune Plus window, choose **Diagnostics > Diagnostics**. (To open Tune Plus, choose **Start > Programs > Xcalibur > LCQ Tune**.) The Diagnostics dialog box appears. See Figure 8-1.
3. Select one of the following options (refer to Table 8-1):
   - To test all of the electronic subsystems (that is, the vacuum system, power supplies, lenses, ion detection system, and RF voltage electronics), click on the **All** tab and select the **Everything** option.
   - To test an individual subsystem, click on the tab corresponding to that subsystem and select the appropriate options. Refer to Table 8-2 for more information on these options.

4. Select how many times you want to run the tests, and whether or not you want to print reports or to stop on a failure.
5. Click on the **Start** button to start the diagnostics.

LCQ Deca XP MAX starts testing and displays a chronological log of all diagnostic tests in the Testing text box. Once testing for a specific subsystem is completed, LCQ Deca XP MAX displays either Pass or Fail in the Results group box. If the LCQ Deca XP MAX diagnostics indicates a problem, perform the maintenance procedure indicated by the LCQ Deca XP MAX diagnostics, by Thermo Electron San Jose Technical Support, or by a Thermo Electron San Jose Customer Support Engineer. For more information on the LCQ Deca XP MAX diagnostics, refer to the LCQ Deca XP MAX online Help.

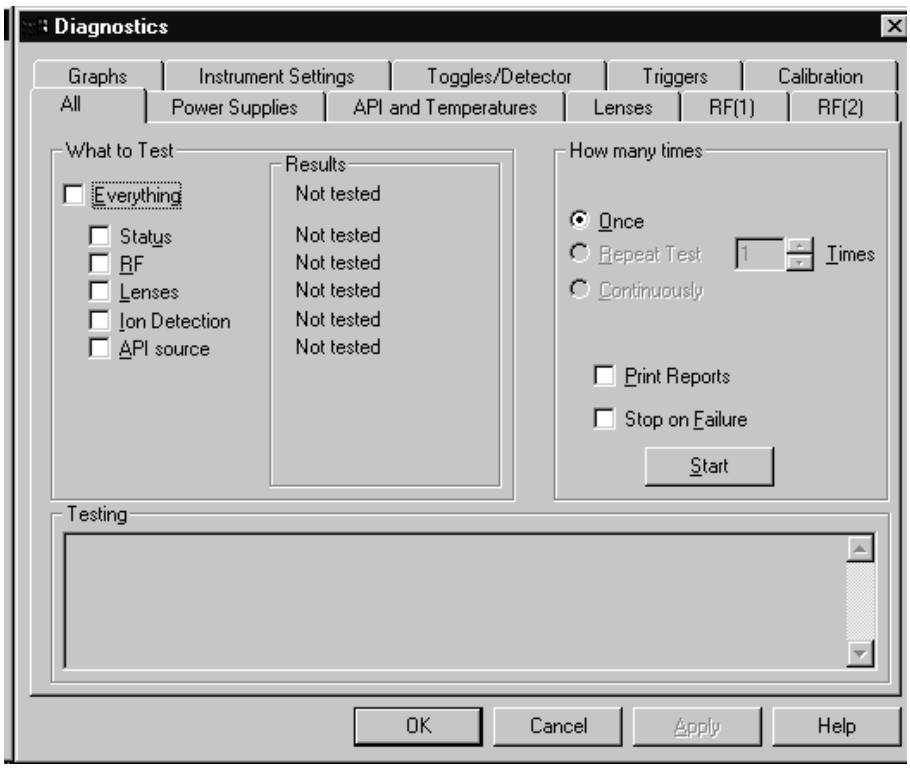

Figure 8-1. Diagnostics dialog box

Table 8-1. Diagnostic tests in Tune Plus

If you Select	Diagnostics will
Everything	test Status, RF, Lenses, Ion Detection, and API source (5 minutes to complete)
Status	check all device static values, refer to Table 8-2
RF	test five RF devices, refer to Table 8-2
Lenses	test four LENSES devices, refer to Table 8-2
Ion Detection	test three ION DETECTION devices, refer to Table 8-2
API source	test three API source devices, refer to Table 8-2

Table 8-2. Diagnostic items tested in Tune Plus

Item Tested in What to Test Group Box	Scanning Device Number in Graph View	Scanning Device Name
Status	n/a	Refer to Table A-1 in the Appendix for static details
RF-1	03 (readback number 06)	Aux amplitude (V) 0 to 83.2
RF-2	10	Main RF DAC (16-bit) 0 to 65535
RF-3	11 (readback number 50)	Vernier det. RF amp (V) 0 to 65535
RF-4	11 (readback number 51)	Vernier RF DAC (16-bit) 0 to 65535
RF-5	25 (readback number 52)	Octapole RF DAC (V) 0 to 1000
Lenses-1	30	Octapole 1 offset (V) -132 to 132
Lenses-2	01	Octapole 2 offset (V) -132 to 132
Lenses-3	07	Octapole lens (V) -136 to 136
Lenses-4	25	Octapole det. RF amp. (V) 0 to 1000
Ion Detection-1	04	Trap Offset (V) -132 to 132
Ion Detection-2	17	Tube gate (V) -200 to 198
Ion Detection-3	05 (readback number 41)	Multiplier (V) 0 to -2200
API-1	20	Auxiliary gas flow (arb) 0 to 60
API-2	19	Sheath gas flow (arb) 20 to 100
API-3	23	Ion Transfer Capillary Voltage (V) -132 to 132

8.2 Replacing a Fuse

Fuses protect the various circuits by opening the circuits whenever overcurrent occurs. On the MS detector, most of the fuses are located on the System Control PCB. Several fuses, however, are located on the RF Voltage Amplifier PCB, Analyzer Auxiliary PCB, and Power Module. The function and current rating of the various fuses are listed in Table 8-3.

Check fuses when power is lost to a fused subsystem.

CAUTION. Always place the electronics service switch in the Service position (or shut down the system and disconnect the power cord) before you replace fuses on the System Control PCB or RF Voltage Amplifier PCB.

Table 8-3. MS Detector Fuses

Location	Fuse	Circuit	Description	P/N
System Control PCB	F1	Multipoles and tube lens power supplies, ion gauge grid	0.25 A, time lag, 5 x 20 mm, 250 V	00006-01700
System Control PCB	F2	Multipoles and tube lens power supplies	0.25 A, time lag, 5 x 20 mm, 250 V	00006-01700
System Control PCB	F3	Ion transfer capillary, multipoles, and mass analyzer DC offsets	0.16 A, time lag, 5 x 20 mm, 250 V	00006-01700
System Control PCB	F4	Ion transfer capillary, multipoles, and mass analyzer DC offsets	0.16 A, time lag, 5 x 20 mm, 250 V	00006-01700
System Control PCB	F5	Ion gauge filament	3.15 A, time lag, 5 x 20 mm, 250 V	00006-10510
System Control PCB	F6	Ion transfer capillary heater	3.15 A, time lag, 5 x 20 mm, 250 V	00006-10510
System Control PCB	F7	Conversion dynode power supply	0.25 A, time lag, 5 x 20 mm, 250 V	00006-11204
System Control PCB	F8	RF detector power supply	0.4 A, time lag, 5 x 20 mm, 250 V	00006-05080
System Control PCB	F9	RF detector power supply	0.4 A, time lag, 5 x 20 mm, 250 V	00006-05080
System Control PCB	F10 F11	APCI vaporizer heater	2.5 A, time lag, 5 x 20 mm, 250 V	00006-10510
RF Voltage Amplifier PCB	F1	+36 V	1.0 A, quick act, 5 x 20 mm, 250 V	00006-07610
RF Voltage Amplifier PCB	F2	-28 V	0.5 A, quick act, 5 x 20 mm, 250 V	00006-07608

Table 8-3. MS Detector Fuses, continued

Location	Fuse	Circuit	Description	P/N
Analyzer Auxiliary PCB	F1	-28 V	1.6 A, quick act, 5 x 20 mm, 250 V	00006-08610
Analyzer Auxiliary PCB	F2	+36 V	1.6 A, quick act, 5 x 20 mm, 250 V	00006-08610
Power Module	F1	Voltage select switch	3.5 A, time lag, 5 x 20 mm, 250 V	00006-10510

Caution. Use only the fuses specified in Table 8-3. Never replace a fuse with a fuse of a different type, voltage, or current rating.

Note. To replace the fuse in the Power Module you need to remove the tower, System Control PCB, and embedded computer. Do not replace the fuse in the Power Module unless you are qualified to do so

To replace a fuse on the System Control PCB, RF Voltage Amplifier PCB, or Analyzer Auxiliary PCB, proceed as follows:

1. Place the electronics service switch in the Service position (or shut down and vent the LCQ Deca XP MAX system as described in the topic **Shutting Down the System Completely** on page 6-5 in the **System Shutdown, Startup, and Reset** chapter).

CAUTION. Make sure that the LCQ Deca XP MAX electronic service switch is in the Service position (or shut down the system and disconnect the power cord) before you proceed.

2. Remove the top cover of the MS detector as described in the topic **Removing the Top Cover of the MS Detector** on page 5-22.
   - To replace a fuse on the System Control PCB, go to step 3.
   - To replace a fuse on the RF Voltage Amplifier PCB, go to step 4.
   - To replace a fuse on the Analyzer Auxiliary PCB, go to step 5.
3. To replace a fuse on the System Control PCB, proceed as follows. See Figure 8-2 for the location of the System Control PCB and its fuses.
   a. Remove the right side cover of the MS detector, as follows:
      i. Loosen the fastener that secures the right side cover to the chassis of the MS detector.
      ii. Slide the side cover back about 1.25 cm (0.5 in.), and then pull it out and away from the MS detector.

b. Remove the right side cover of the MS detector as follows:

   i. Loosen the screw that secures the right side cover to the chassis of the MS detector.

   ii. Slide the side cover forward, and then lift it out and away from the MS detector.

c. Remove the System Control PCB protective cover, as follows:

   i. With a Phillips screwdriver, loosen the five screws that hold the protective cover to the MS detector chassis.

   ii. Pull the cover up and out of the guide slots on the MS detector chassis.

> **Caution.** To prevent damage to the electronics due to electrostatic discharge, attach an electrostatic discharge (ESD) strap to your wrist before continuing.

d. Locate and replace the defective fuse on the System Control PCB with a fuse of the same type, voltage, and current rating. Refer to Table 8-3.

e. Reinstall the protective cover over the System Control PCB.

f. Reinstall the right side cover of the MS detector as follows:

   i. Slide the side cover back through the guide slots.

   ii. With a Phillips screwdriver, tighten the five screws that hold the protective cover to the MS detector chassis. Go to step 6.

4. To replace a fuse on the RF Voltage Amplifier PCB, proceed as follows. See Figure 8-5 on page 8-18 for the location of the RF Voltage Amplifier PCB.

   a. Open the front door of the MS detector by loosening the 1/4-in. Allen screw on the right side of the door with an Allen wrench. Be careful not to damage any fused silica tubing leading to the API source.

   b. Remove the top cover of the MS detector as follows:

      i. Loosen the two fasteners that hold the top cover to the MS detector chassis. The fasteners are located in the upper right and left corners of the chassis.

      ii. Slide the top cover forward by about 1.2 cm (0.5 in.).

      iii. With one hand under the center of the top cover, lift the top cover up and away from the MS detector.

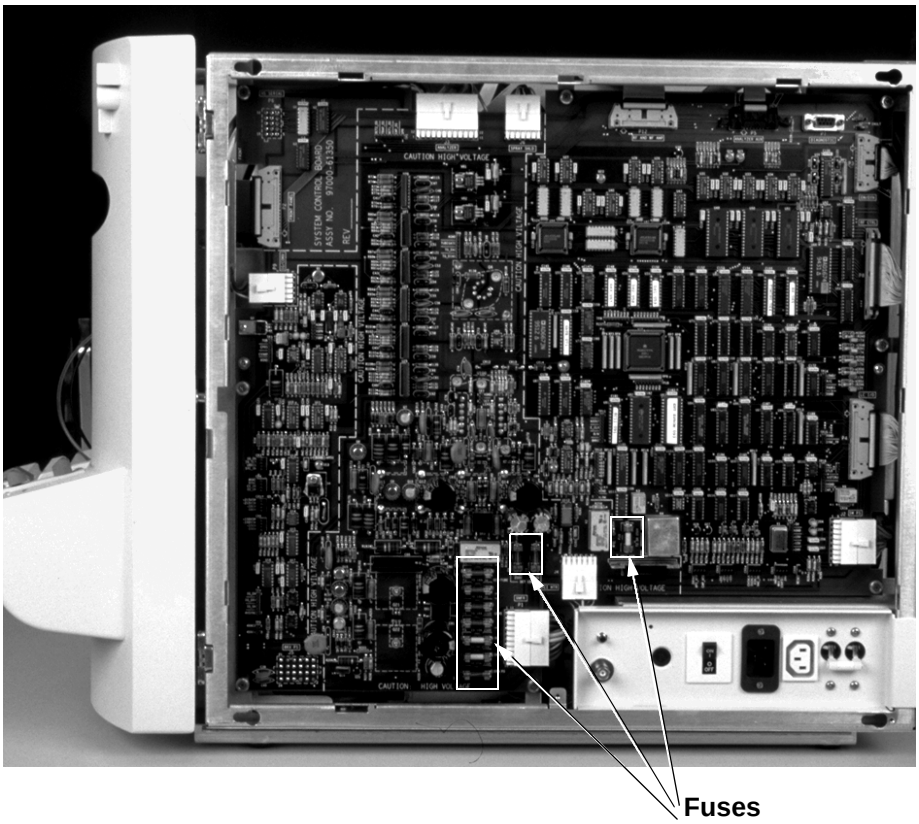

Figure 8-2. System Control PCB, showing the location of the fuses

c. With a Phillips screwdriver, loosen the eight screws that hold the metal cover to the RF Voltage Amplifier PCB. Remove the cover.

d. Locate and replace the defective fuse on the RF Voltage Amplifier PCB with a fuse of the same type, voltage, and current rating. Refer to Table 8-3.

e. Place the metal cover over the RF Voltage Amplifier PCB. With a Phillips screwdriver, tighten the eight screws that secure the cover.

5. To replace a fuse on the Analyzer Auxiliary PCB, proceed as follows. See Figure 8-5 on page 8-18 for the location of the Analyzer Auxiliary PCB.

   a. Disconnect the seven cables that connect to the top of the Analyzer Auxiliary PCB. (Three coaxial cables come from the Analyzer PCB, one coaxial cable comes from the Waveform DDS PCB in the embedded computer, one coaxial cable comes from the Waveform Amplifier PCB, one 7-lead cable comes from the System Control PCB, and one 4-lead cable comes from the 36 V power supply.)

b. With a Phillips screwdriver, loosen the six screws that hold the metal cover to the Analyzer Auxiliary PCB. Remove the protective cover to expose the Analyzer Auxiliary PCB.

c. Locate and replace the defective fuse on the Analyzer Auxiliary PCB with a fuse of the same type, voltage, and current rating. Refer to Table 8-3.

d. Reinstall the protective cover on the Analyzer Auxiliary PCB. With a Phillips screwdriver, tighten the six screws that hold the metal cover to the Analyzer Auxiliary PCB.

e. Reconnect the seven cables that connect to the top of the Analyzer Auxiliary PCB. (Three coaxial cables come from the Analyzer PCB, one coaxial cable comes from the Waveform DDS PCB in the embedded computer, one coaxial cable comes from the Waveform Amplifier PCB, one 7-lead cable comes from the System Control PCB, and one 4-lead cable comes from the 36 V power supply.)

6. Reinstall the top cover of the MS detector as follows:

   a. With one hand under the center of the top cover, place the top cover over the MS detector such that the front of the cover is about 1.2 cm (0.5 in.) in front of the front of the MS detector.

   b. Slide the cover back until it is flush with the front doors (when they are closed).

   c. Tighten with a Phillips screwdriver the two fasteners to secure the top cover to the chassis.

7. Close the front door of MS detector. Tighten the 1/4-in. Allen screw on the right side of the door with an Allen wrench.

8. Place the electronics service switch in the Operational position.

9. Run the LCQ Deca XP MAX diagnostics to verify that the system is operational.

8.3 Replacing PCBs and Assemblies in the MS Detector

This section presents the following replacement procedures for PCBs and assemblies:

- Replacing PCBs and assemblies in the tower
- Replacing PCBs in the embedded computer
- Replacing the Vent Delay PCB and backup battery, ion gauge, and vent valve
- Replacing the electron multiplier and Conversion Dynode Power Supplies, Analyzer PCB, Analyzer Auxiliary PCB, Waveform Amplifier PCB, RF Voltage Amplifier PCB
- Replacing the System Control PCB
- Replacing the RF Voltage Control
- Replacing the Low Pass Filter PCB

CAUTION. With the electronics service switch in the Service position, the system is still under vacuum. Power is still supplied to the forepump, +48, +24 V dc switching power supply, Turbomolecular Pump Controller, turbomolecular pump, turbomolecular pump fan, embedded computer fan, tower fan, vent valve, and Vent Delay PCB. Thus, before these components can be serviced, the main power circuit breaker switch must be placed in the OFF (O) position and the power cord must be unplugged from the power outlet.

Caution. Never insert a test probe (for example, an oscilloscope probe) into the sockets of female cable connectors on PCBs. This can damage the sockets.

Replacing Power Supplies in the Tower

The following power supplies are installed in the tower. See Figure 8-3.

- +5 V, 15 V, +24 V dc and +36 V, -28 V dc switching power supplies
- Turbomolecular Pump Controller/ +48V, +24V, switching power supply
- 8 kV power supply
- Toroidal Transformer Power Module

Note. To service the Power Module you need to remove the tower, System Control PCB, and embedded computer. Do not service the Power Module unless you are qualified to do so.

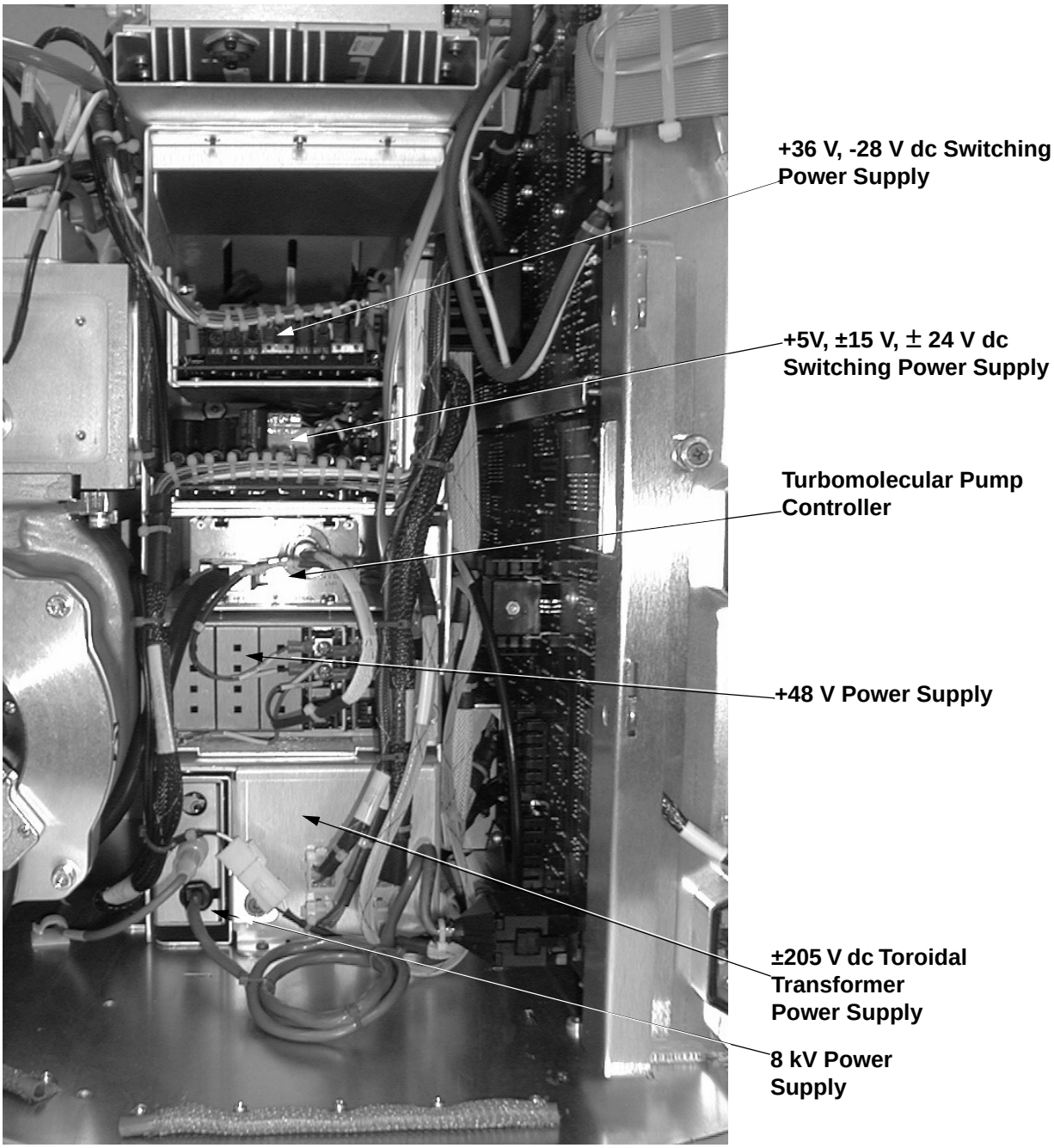

Figure 8-3. Power supplies in the electronics tower

To replace a PCB or power supply in the tower, proceed as follows:

1. Shut down and vent the system as described in the topic **Shutting Down the System Completely** on page 6-5 in the **System Shutdown, Startup, and Reset** chapter.

CAUTION. Make sure that the LCQ Deca XP MAX power cord is unplugged before you proceed.

2. Remove the top cover of the MS detector as described in the topic **Removing the Top Cover of the MS Detector** on page 5-22.
3. Reposition the embedded computer (to expose the tower), as follows:
   a. Disconnect the cables that connect to the top of the embedded computer.
   b. Loosen the six fasteners that secure the embedded computer to the vacuum manifold, base plate, and chassis.
   c. Lift up the embedded computer a sufficient distance to access the two cables that connect to the bottom of the embedded computer. Disconnect the two cables that connect to the bottom of the embedded computer.
   d. Lift the embedded computer and reposition it such that the two hooks in the back of the embedded computer box insert into the two slots in the MS detector chassis. See Figure 8-4 on page 8-16 for the location of the slots.
   e. Choose one of the following:
      - To replace the switching power supply assembly (which includes the +5 V, 15 V, +24 V dc and +36 V, -28 V dc switching power supplies), go to step 4.
      - To replace the Turbomolecular Pump Controller, go to step 5.
      - To replace the 8 kV power supply, go to step 6.
4. To replace the switching power supply assembly (which includes the +5 V, 15 V, +24 V dc and +36 V, -28 V dc switching power supplies), proceed as follows:
   a. Disconnect the cable to the RF Voltage Amplifier PCB from the connector on the RF Voltage Amplifier PCB. (See Figure 8-5 on page 8-18 for the location of the RF Voltage Amplifier PCB, Analyzer Auxiliary PCB, and Waveform Amplifier PCB.)
   b. Disconnect the two cables to the Analyzer Auxiliary PCB from the two connectors on the Analyzer Auxiliary PCB.
   c. Disconnect the cable to the Waveform Amplifier PCB from the connector on the Waveform Amplifier PCB.
   d. Disconnect the cable that is connected to the fan cable.

e. Disconnect the two cables to the Power Module from the two (upper) connectors on the Power Module.

f. Disconnect the cable that is connected to the reset button cable.

g. Loosen by hand (or with a Phillips screwdriver) the fastener that holds the switching power supply assembly to the tower.

h. Remove the switching power supply assembly from the tower.

i. Unpack the new switching power supply assembly (P/N 97000-60151). Retain the packing materials so that you can pack and ship the defective switching power supply assembly to the Thermo Electron San Jose Repair Center. Be sure to note the apparent problem or symptoms on the enclosed forms.

j. Install the new switching power supply assembly in the space occupied by the old assembly.

k. Tighten by hand the fastener that holds the switching power supply assembly to the tower.

l. Reconnect the cable that is connected to the reset button cable.

m. Reconnect the two cables to the Power Module to the two (upper) connectors on the Power Module.

n. Reconnect the cable that is connected to the fan cable.

o. Reconnect the cable to the Waveform Amplifier PCB to the connector on the Waveform Amplifier PCB.

p. Reconnect the two cables to the Analyzer Auxiliary PCB to the two connectors on the Analyzer Auxiliary PCB.

q. Reconnect the cable to the RF Voltage Amplifier PCB to the connector on the RF Voltage Amplifier PCB. Go to step 7.

5. To replace the Turbomolecular Pump Controller, or the +48V, +24V switching power supply, proceed as follows:

a. Disconnect from the Turbomolecular Pump Controller the thick cable to the turbomolecular pump.

b. Disconnect from the Turbomolecular Pump Controller the thin cable that comes from the Power Module.

c. Disconnect the four pin connector from the Turbomolecular Pump Controller Sled.

d. Loosen by hand (or with a Phillips screwdriver) the fastener that holds the Turbomolecular Pump Controller Sled to the tower.

e. Remove the Turbomolecular Pump Controller Sled from the tower.

f. Unpack the new Turbomolecular Pump Controller (P/N 00108-10012). Retain the packing materials so that you can pack and ship the defective Turbomolecular Pump Controller to the

Thermo Electron San Jose Repair Center. Be sure to note the apparent problem or symptoms on the enclosed forms.

g. Install the new Turbomolecular Pump Controller in the space occupied by the old controller.

h. Unpack the new +48V, +24V switching power supply (P/N 00012-24208).

i. Install the +48V, +24V switching power supply. Reconnect the three cables which were disconnected during removal.

j. Tighten by hand the fastener that holds the Turbomolecular Pump Controller to the tower. Reconnect the four pin connector to the Turbomolecular Pump Controller Sled.

k. Reconnect to the Turbomolecular Pump Controller the thin cable that comes from the Power Module.

l. Reconnect to the Turbomolecular Pump Controller the thick cable that goes to the turbomolecular pump. Go to step 7.

6. To replace the 8 kV power supply, proceed as follows:

   a. Disconnect from the 8 kV power supply the cable that comes from the API panel.

   b. Disconnect from the rear of the System Control PCB (at J5), the thick cable that goes to the System Control PCB.

   c. Loosen by hand (or with a Phillips screwdriver) the fastener that holds the 8 kV power supply to the tower.

   d. Remove the 8 kV power supply from the tower.

   e. Unpack the new 8 kV power supply (P/N 97000-60142). Retain the packing materials so that you can pack and ship the defective 8 kV power supply to the Thermo Electron San Jose Repair Center. Be sure to note the apparent problem or symptoms on the enclosed forms.

   f. Reinstall the new 8 kV power supply in the space occupied by the old power supply.

   g. Tighten by hand the fastener that holds the 8 kV power supply to the tower.

   h. Reconnect to the rear of the System Control PCB (at J5), the thick cable that comes from the 8 kV power supply.

   i. Reconnect to the 8 kV power supply the thin cable that comes from the API panel. Go to step 7.

7. Return the embedded computer to its original position as follows:

   a. Lift the embedded computer up and away from the MS detector chassis. Lift up the embedded computer a sufficient distance to access the bottom of the embedded computer.

b. Reconnect to the bottom of the embedded computer the cable that comes from the switching power supplies.

c. Reconnect the fan power cable to the embedded computer fan. Make sure that the plug on the end of the cable contours the fan (that is, the concave side of the plug is against the fan).

d. Reposition the embedded computer in its original position in front of the tower.

e. Tighten the six fasteners that secure the embedded computer to the vacuum manifold, base plate, and chassis.

f. Reconnect the cables that connect to the top of the embedded computer. See Figure 8-4 on page 8-16 and Figure 8-5 on page 8-18.

8. Reinstall the top cover of the MS detector as described in the topic **Reinstalling the Top Cover of the MS Detector** on page 5-34.
9. Close the front doors of the MS detector.
10. Restart the system as described in the topic **Starting Up the System After a Complete Shutdown** on page 6-7 in the **System Shutdown, Startup, and Reset** chapter.
11. Run the Tune Plus diagnostics to verify that the system is operational.

Replacing PCBs in the Embedded Computer

The Ethernet PCB (P/N 97033-60280), Acquisition DSP PCB (P/N 97000-61260), Control DSP PCB (P/N 97000-61270), Waveform DDS PCB (P/N 97000-61430), and CPU PCB (P/N 97144-60260) reside in the embedded computer. See Figure 8-4. (See Figure 8-5 on page 8-18 for the location of the embedded computer.)

To replace a PCB in the embedded computer, proceed as follows:

1. Place the electronics service switch in the Service position (or shut down and vent the LCQ Deca XP MAX system as described in the topic **Shutting Down the System Completely** on page 6-5 in the **System Shutdown, Startup, and Reset** chapter).

CAUTION. Make sure that the LCQ Deca XP MAX electronic service switch is in the Service position (or shut down or shut down the system and disconnect the power cord) before you proceed.

2. Open the front doors of the MS detector.
3. With a Phillips screwdriver, loosen the two fasteners that hold the front cover to the embedded computer. Remove the front cover of the embedded computer.
4. Locate the PCB you want to replace. See Figure 8-4.

5. Disconnect all electrical cables to the PCB that you want to replace.
6. With a Phillips screwdriver, remove the screw that holds the PCB to the card cage.

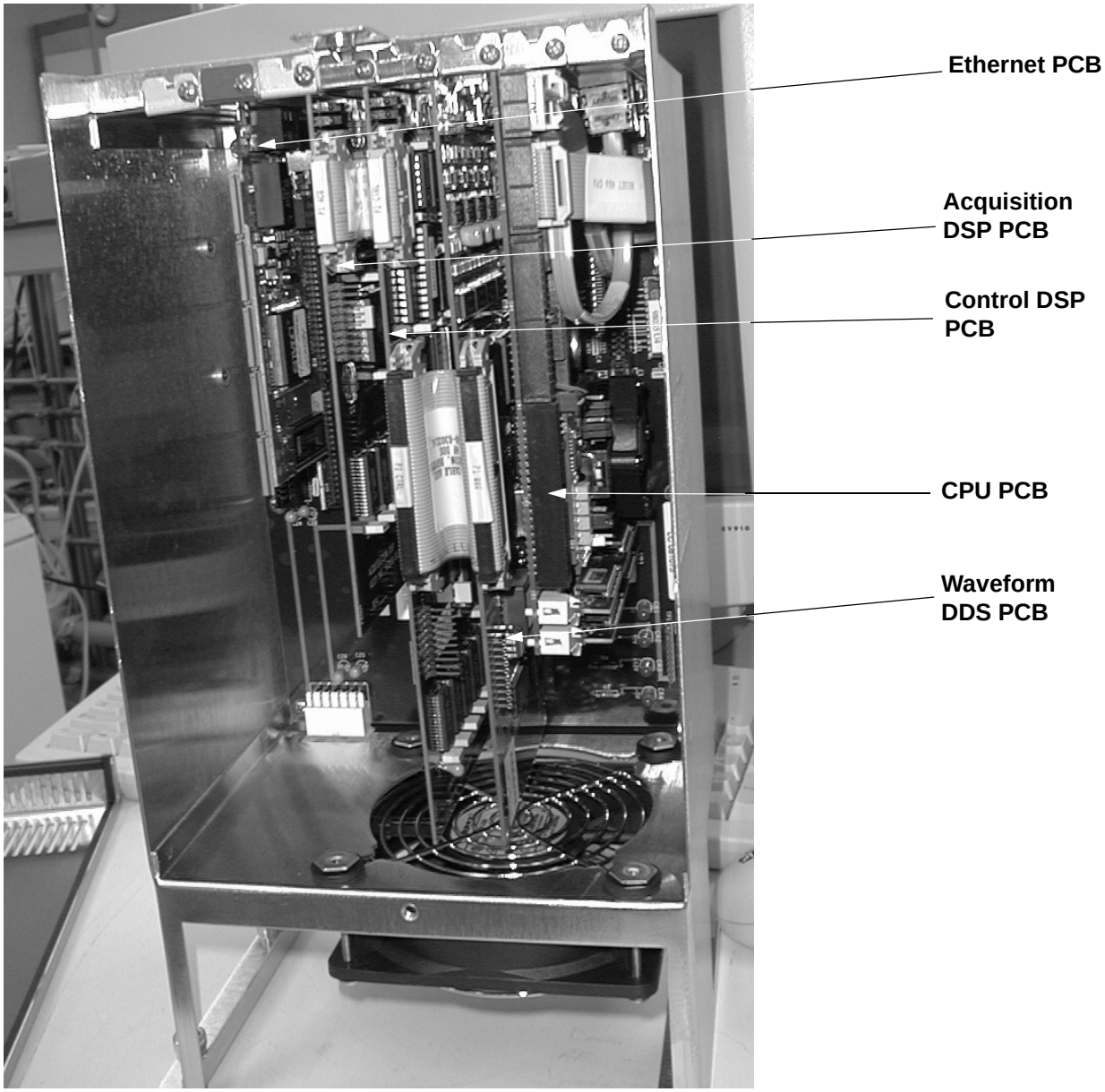

Figure 8-4. Embedded computer (with front cover removed)

> **Caution.** To prevent damage to the electronics due to electrostatic discharge, attach an electrostatic discharge (ESD) strap to your wrist before continuing.

7. Unseat the PCB from the mainboard and pull it out of the embedded computer.
8. Unpack the new PCB. Retain the packing materials so that you can pack and ship the defective PCB to the Thermo Electron San Jose Repair Center. **Be sure to note the apparent problem or symptoms on the enclosed forms.**
9. Seat the new PCB in the mainboard.
10. Reinstall the retainer bracket that holds the PCBs in place. With a Phillips screwdriver, tighten the retainer bracket screw.
11. Reconnect all electrical cables to the PCB that you replaced.
12. Reinstall the front cover of the embedded computer. Tighten the knurled fastener that holds the front cover to the embedded computer.
13. Close the front doorS of the MS detector.
14. Place the electronics service switch in the Operational position.
15. Run the LCQ Deca XP MAX diagnostics to verify that the system is operational.

Replacing the Vent Delay PCB and Backup Battery, Ion Gauge, and Vent Valve

The Vent Delay PCB, backup battery, ion gauge, and vent valve all can be accessed from the top of the MS detector. See Figure 8-5.

CAUTION. The LCQ Deca XP system must be shut down and the power cord unplugged before you service the vent valve, Vent Delay PCB, Convectron gauge, or ion gauge.

To replace the Vent Delay PCB, proceed as follows:

1. Shut down and vent the system as described in the topic **Shutting Down the System Completely** on page 6-5 in the **System Shutdown, Startup, and Reset** chapter.

CAUTION. Make sure that the LCQ Deca XP MAX power cord is unplugged before you proceed.

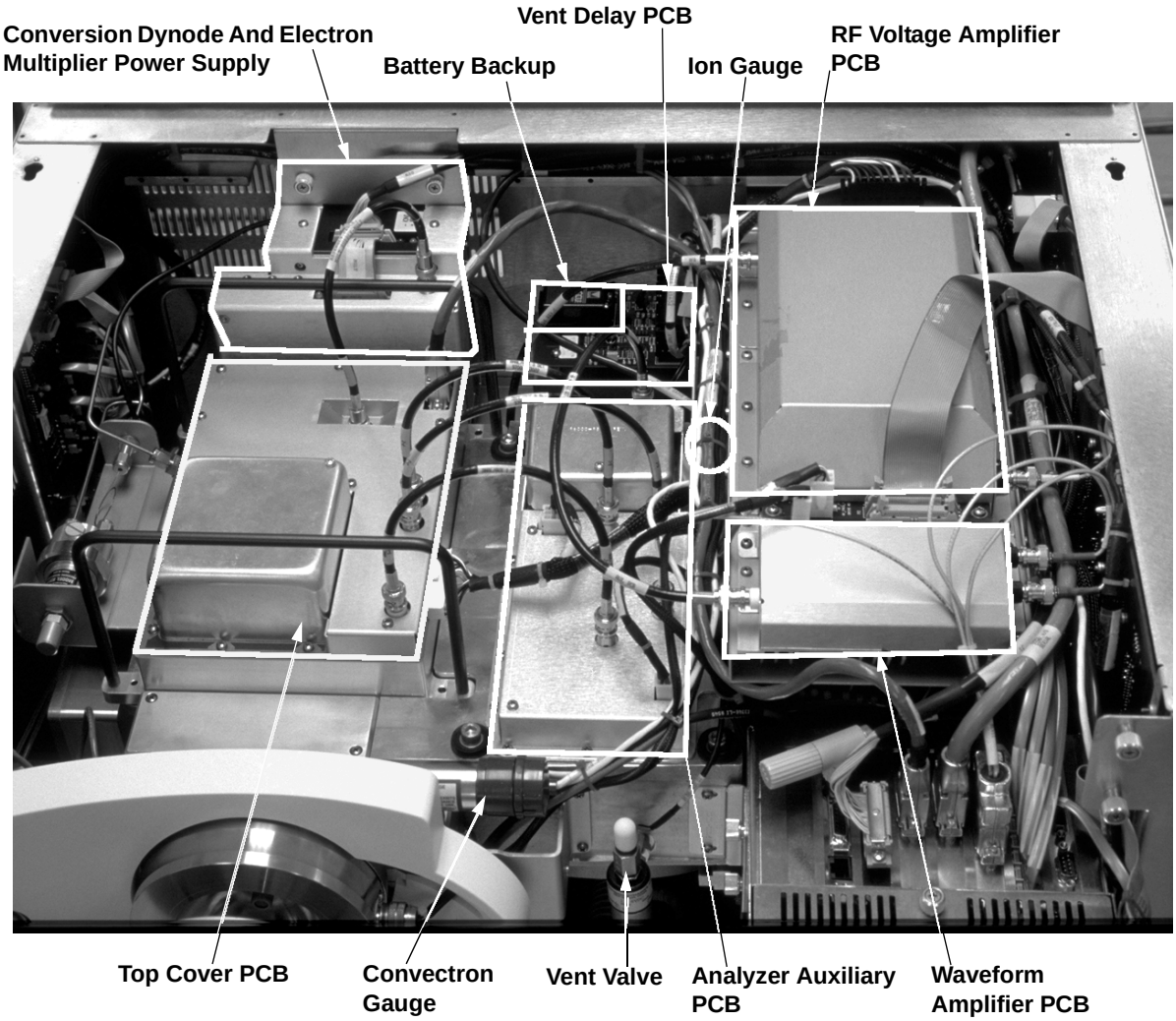

Figure 8-5. PCBs and assemblies that are accessible from the top of the MS detector

2. Remove the top cover of the MS detector as described in the topic **Removing the Top Cover of the MS Detector** on page 5-22.
   - To replace the Vent Delay PCB and backup battery, go to step 3.
   - To replace the vent valve, go to step 4.
   - To replace the ion gauge, go to step 5.
3. To replace the Vent Delay PCB, proceed as follows:
   a. Disconnect at J1 the cable to the vent valve.
   b. Disconnect at J2 the cable to the Power Module.
   c. With a Phillips screwdriver, loosen the four screws that secure the Vent Delay PCB to the MS detector chassis. Remove the Vent Delay PCB.

d. Unpack the new Vent Delay PCB (P/N 97000-61370). Retain the packing materials so that you can pack and ship the defective PCB to the Thermo Electron San Jose Repair Center. Be sure to note the apparent problem or symptoms on the enclosed forms.

e. Replace the battery (P/N 00301-05720) if necessary. To replace the battery on the Vent Delay PCB, proceed as follows. See Figure 8-5 on page 8-18 for the location of the battery. Remove the battery from the Vent Delay PCB. Reinstall a new battery (P/N 00301-05720).

f. Position the new Vent Delay PCB in the space that was occupied by the old PCB.

g. With a Phillips screwdriver, tighten the four screws that secure the Vent Delay PCB.

h. Reconnect at J1 the cable that goes to the vent valve.

i. Reconnect at J2 the cable that comes from the Power Module. Go to step 6.

4. To replace the vent valve, proceed as follows:

   a. Disconnect the cable that comes from the Vent Delay PCB.

   b. With a 7/16-in. open-end wrench, loosen the fitting to the vent valve solenoid. Remove the vent valve.

   c. Replace the old vent valve with a new one (P/N 97000-60128).

   d. With a 7/16-in. open-end wrench, tighten the fitting to the vent valve solenoid.

   e. Reconnect the cable that comes from the Vent Delay PCB. Go to step 6.

5. To replace the ion gauge, proceed as follows:

   a. Disconnect the cable from the top of the ion gauge by pulling it free from the ion gauge.

   b. Unscrew the ion gauge by hand from the vacuum manifold.

   c. Replace the old ion gauge with a new one (P/N 00105-01525). Screw it into the vacuum manifold.

   d. Reattach the cable to the top of the ion gauge. Go to step 6.

6. Reinstall the top cover of the MS detector as described in the topic **Reinstalling the Top Cover of the MS Detecto**r on page 5-34.

7. Restart the system as described in the topic **Starting Up the System After a Complete Shutdown** on page 6-7 in the **System Shutdown, Startup, and Reset** chapter.

Replacing the Electron Multiplier and Conversion Dynode Power Supplies, Analyzer PCB, Analyzer Auxiliary PCB, Waveform Amplifier PCB, RF Voltage Amplifier PCB

The electron multiplier and conversion dynode power supplies, Analyzer PCB, Analyzer Auxiliary PCB, Waveform Amplifier PCB, and RF Voltage Amplifier PCB are accessible from the top of the MS detector. See Figure 8-5 on page 8-18.

To replace the electron multiplier power supply, conversion dynode power supply, Analyzer PCB, Analyzer Auxiliary PCB, Waveform Amplifier PCB, or RF Voltage Amplifier PCB, proceed as follows:

1. Place the electronics service switch in the Service position (or shut down and vent the LCQ Deca XP MAX system as described in the topic **Shutting Down the System Completely** on page 6-5 in the **System Shutdown, Startup, and Reset** chapter).

CAUTION. Make sure that the LCQ Deca XP MAX electronic service switch is in the Service position (or shut down the system and disconnect the power cord) before you proceed.

2. Remove the top cover of the MS detector as described in the topic **Removing the Top Cover of the MS Detector** on page 5-22.
   - To replace the electron multiplier power supply and the conversion dynode power supply, go to step 3.
   - To replace the Analyzer PCB, go to step 4.
   - To replace the Analyzer Auxiliary PCB, go to step 5.
   - To replace the Waveform Amplifier PCB, go to step 6.
   - To replace the RF Voltage Amplifier PCB, go to step 7.
3. To replace the electron multiplier power supply and/or the conversion dynode power supply, proceed as follows. See Figure 8-5 on page 8-18 for the location of the electron multiplier and conversion dynode power supplies.
   a. Disconnect the conversion dynode high voltage cable at the conversion dynode feedthrough by pulling it free from the feedthrough.
   b. Disconnect the electron multiplier high voltage cable at the electron multiplier power supply.

c. Disconnect from the top of the electron multiplier and conversion dynode power supplies the electrical cable that comes from the System Control PCB.

d. Loosen by hand or with a Phillips screwdriver the two fasteners that hold the electron multiplier and conversion dynode power supply module to the MS detector chassis.

e. Carefully lift the electron multiplier and conversion dynode power supply module up and away from the MS detector.

f. You must replace the conversion dynode power supply and the electron multiplier power supply together as a module (P/N 97000-98042). Retain the packing materials so that you can pack and ship the defective power supply module or PCB to the Thermo Electron San Jose Repair Center. Be sure to note the apparent problem or symptoms on the enclosed forms.

g. Install the electron multiplier and conversion dynode power supply module in the space occupied by the old power supply module.

h. With a Phillips screwdriver, tighten the two fasteners that hold the electron multiplier and conversion dynode power supply module to the MS detector chassis.

i. Reconnect to the electron multiplier and conversion dynode power supplies the electrical cable that comes from the System Control PCB.

j. Reconnect the electron multiplier high voltage cable to the electron multiplier power supply.

k. Reconnect the conversion dynode high voltage cable to the conversion dynode feedthrough. Go to step 8.

4. To replace the Analyzer Auxiliary PCB, proceed as follows. See Figure 8-5 on page 8-18 for the location of the Analyzer Auxiliary PCB.

a. Disconnect (at P5) the octapoles cable that comes from the Analyzer Auxiliary PCB.

b. Disconnect (at P4) the lenses cable that comes from the System Control PCB.

c. Disconnect (at P2 and P3) the two endcap electrode cables that come from the Analyzer Auxiliary PCB.

d. Disconnect (at P1) the electrometer cable. (If necessary, use a small screw driver to loosen the screws that secure the cable.)

e. Disconnect the electron multiplier high voltage cable that comes from the electron multiplier power supply.

f. Use a 7/16-in. open-end wrench to disconnect the helium damping gas line from the fitting.

g. With a Phillips screwdriver, remove the metal cover from the Analyzer PCB.

h. With a Phillips screwdriver, remove the screws that hold the Analyzer PCB to the top cover plate of the vacuum manifold.

> **Caution.** To prevent damage to the electronics due to electrostatic discharge, attach an electrostatic discharge (ESD) strap to your wrist before continuing.

i. Unseat and remove the Analyzer PCB from the top cover plate.

j. Unpack the new Analyzer PCB (P/N 97033-61051). Retain the packing materials so that you can pack and ship the defective PCB to the Thermo Electron San Jose Repair Center. Be sure to note the apparent problem or symptoms on the enclosed forms.

k. Carefully align and seat the Analyzer PCB into the 8-pin and 4-pin feedthrough on the top cover plate.

l. With a Phillips screwdriver, reinstall the screws that hold the Analyzer PCB to the top cover plate.

m. With a Phillips screwdriver, reinstall the metal cover.

n. Use a 7/16-in. open-end wrench to reconnect the helium damping gas line to the fitting.

o. Reconnect (at P5) the octapoles cable that comes from the Analyzer Auxiliary PCB.

p. Reconnect (at P4) the lenses cable that comes from the System Control PCB.

q. Reconnect (at P2 and P3) the two endcap cables that come from the Analyzer Auxiliary PCB.

r. Reconnect (at P1) the electrometer cable.

s. Reconnect the electron multiplier high voltage cable that comes from the electron multiplier power supply. Go to step 8.

5. To replace the Analyzer Auxiliary PCB, proceed as follows. See Figure 8-5 on page 8-18 for the location of the Analyzer Auxiliary PCB.

a. Disconnect all cables to the Analyzer Auxiliary PCB.

> **Caution.** To prevent damage to the electronics due to electrostatic discharge, attach an electrostatic discharge (ESD) strap to your wrist before continuing.

b. With a Phillips screwdriver, remove the metal cover from the Analyzer Auxiliary PCB.

c. With a Phillips screwdriver, remove the screws that hold the Analyzer Auxiliary PCB to the top of the vacuum manifold. Remove the Analyzer Auxiliary PCB.

d. Unpack the new Analyzer Auxiliary PCB (P/N 97000-61340). Retain the packing materials so that you can pack and ship the defective PCB to the Thermo Electron San Jose Repair Center. Be sure to note the apparent problem or symptoms on the enclosed forms.

e. Install the new PCB in the place occupied by the old PCB.

f. With a Phillips screwdriver, reinstall the screws that secure the Analyzer Auxiliary PCB to the top of the vacuum manifold.

g. Reinstall the metal cover to the top of the Analyzer Auxiliary PCB.

h. Reconnect all cables to the Analyzer Auxiliary PCB that you disconnected in step 5a. Go to step 8.

6. To replace the Waveform Amplifier PCB, proceed as follows. See Figure 8-5 on page 8-18 for the location of the Waveform Amplifier PCB.

a. Disconnect all cables to the Waveform Amplifier PCB.

Caution. To prevent damage to the electronics due to electrostatic discharge, attach an electrostatic discharge (ESD) strap to your wrist before continuing.

b. With a Phillips screwdriver, remove the metal cover from the Waveform Amplifier PCB.

c. With a Phillips screwdriver, remove the screws that secure the Waveform Amplifier PCB to the top of the tower. Remove the Waveform Amplifier PCB.

d. Unpack the new Waveform Amplifier PCB (P/N 96000-61110). Retain the packing materials so that you can pack and ship the defective PCB to the Thermo Electron San Jose Repair Center. Be sure to note the apparent problem or symptoms on the enclosed forms.

e. Install the new PCB in the place occupied by the old PCB.

f. With a Phillips screwdriver, reinstall the screws that secure the Waveform Amplifier PCB to the top of the tower.

g. Reinstall the metal cover to the top of the Waveform Amplifier PCB.

h. Reconnect all cables to the Waveform Amplifier PCB that you disconnected in step 6a. Go to step 8.

7. To replace the RF Voltage Amplifier PCB, proceed as follows:
   a. Disconnect all cables to the RF Voltage Amplifier PCB.

> **Caution.** To prevent damage to the electronics due to electrostatic discharge, attach an electrostatic discharge (ESD) strap to your wrist before continuing.

   b. With a Phillips screwdriver, remove the metal cover from the RF Voltage Amplifier PCB.
   c. With a Phillips screwdriver, remove the screws that secure the RF Voltage Amplifier PCB to the top of the tower. Remove the RF Voltage Amplifier PCB.
   d. Unpack the new RF Voltage Amplifier PCB (P/N 97144-61016). Retain the packing materials so that you can pack and ship the defective PCB to the Thermo Electron San Jose Repair Center. Be sure to note the apparent problem or symptoms on the enclosed forms.
   e. Install the new PCB in the place occupied by the old PCB.
   f. With a Phillips screwdriver, reinstall the screws that secure the RF Voltage Amplifier to the top of the tower.
   g. Reinstall the metal cover to the top of the RF Voltage Amplifier PCB.
   h. Reconnect all cables to the RF Voltage Amplifier PCB that you disconnected in step 7a. Go to step 8.
8. Reinstall the top cover of the MS detector as described in the topic **Reinstalling the Top Cover of the MS Detector** on page 5-34.
9. Place the electronics service switch in the Operating Position.
10. Run the Tune Plus diagnostics to verify that the system is operational.
11. If you replaced the Analyzer PCB, Analyzer Auxiliary PCB, or RF Voltage Amplifier PCB, tune the ring electrode and quadrupole/octapole RF voltages as described in the topic **Tuning the Ring Electrode and Quadrupole/Octapole RF Voltages** on page 5-34.

Replacing the System Control PCB

To replace the System Control PCB, proceed as follows. See Figure 8-2 on page 8-8 for the location of the System Control PCB.

1. Place the electronics service switch in the Service position (or shut down and vent the LCQ Deca XP MAX system as described in the topic **Shutting Down the System Completely** on page 6-5 in the **System Shutdown, Startup, and Reset** chapter).

> **CAUTION.** Make sure that the LCQ Deca XP MAX electronic service switch is in the Service position (or shut down or shut down the system and disconnect the power cord) before you proceed.

2. Remove the top cover of the MS detector as described in the topic **Removing the Top Cover of the MS Detector** on page 5-22.
3. Remove the right side cover of the MS detector as follows:
   a. Loosen the screw that secures the right side cover to the chassis of the MS detector.
   b. Slide the side cover forward, and then lift it out and away from the MS detector.
4. Remove the System Control PCB protective cover, as follows:
   a. With Phillips screwdriver, loosen the five screws that hold the protective cover to the MS detector chassis.
   b. Pull the cover up and out of the guide slots on the MS detector chassis.
5. Disconnect all cables to the System Control PCB. The following cables are connected to the System Control PCB:
   - Ion gauge / Convectron gauge (P9)
   - Front panel (P2)
   - Analyzer (J3)
   - Spray shield (J6)
   - RF and waveform amplifiers (P12)
   - Analyzer Aux. (P5)
   - Electron multiplier / conversion dynode power supplies (P3)
   - RF control (P8)
   - LC I/O (P4)
   - Switching power supplies (J2)
   - APCI heater (J4)

- Transformer (XMFR) (P1)
- High speed serial (P6 backside of PCB)
- 8 kV power supply (J5 backside of PCB)

6. With a Phillips screwdriver, loosen the eight fasteners that hold the System Control PCB to the MS detector chassis.

> **Caution.** To prevent damage to the electronics due to electrostatic discharge, attach an electrostatic discharge (ESD) strap to your wrist before continuing.

7. Slide the System Control PCB toward the front of the MS detector by 1.2 cm (0.5 in.) so that it clears the data system cable connector.
8. Carefully lift the System Control PCB out and away from the MS detector. Disconnect the high speed serial cable and 8 kV power supply cables if you have not already done so.
9. Unpack the new System Control PCB (P/N 97044-61010). Retain the packing materials so that you can pack and ship the defective PCB to the Thermo Electron San Jose Repair Center. Be sure to note the apparent problem or symptoms on the enclosed forms.
10. Position the new System Control PCB in the space occupied by the old PCB.
11. With a Phillips screwdriver, tighten the three screws and the eight fasteners that hold the System Control PCB to the MS detector chassis.
12. Reconnect all cables to the System Control PCB. The following cables are connected to the System Control PCB:
    - Ion gauge / Convectron gauge (P9)
    - Front panel (P2)
    - Analyzer (J3)
    - Spray shield (J6)
    - RF and waveform amplifiers (P12)
    - Analyzer Aux. (P5)
    - Electron multiplier / conversion dynode power supplies (P3)
    - RF control (P8)
    - LC I/O (P4)
    - Switching power supplies (J2)
    - APCI heater (J4)

- Transformer (XMFR) (P1)
- High speed serial (P6 backside of PCB)
- 8 kV power supply (J5 backside of PCB)

13. Reinstall the protective cover over the System Control PCB, as follows:
    a. Insert the protective cover into the guide slots on the MS detector chassis and push the cover down until it is seated.
    b. With Phillips screwdriver, tighten the five screws that hold the protective cover to the MS detector chassis.
14. Reinstall the right side cover of the MS detector, as follows:
    a. Place the cover against the right side of the MS detector such that the studs on the cover insert into the guide slots on the System Control PCB protective cover.
    b. Slide the side cover forward about 1.2 cm (0.5 in.) until the studs on the cover lock in the guide slots.
    c. Tighten by hand the fastener that secures the side cover to the chassis of the MS detector.
15. Reinstall the top cover of the MS detector as described in the topic **Reinstalling the Top Cover of the MS Detector** on page 5-34.
16. Place the electronics service switch in the Operating Position.
17. Run the Tune Plus diagnostics to verify that the system is operational.

Replacing the RF Voltage Control PCB

To replace the RF Voltage Control PCB (and its housing), proceed as follows. See Figure 8-6 for the location of the RF Voltage Control PCB.

1. Place the electronics service switch in the Service position (or shut down and vent the LCQ Deca XP MAX system as described in the topic **Shutting Down the System Completely** on page 6-5 in the **System Shutdown, Startup, and Reset** chapter).

CAUTION. Make sure that the LCQ Deca XP MAX electronics service switch is in the Service position (or shut down the system and disconnect the power cord) before you proceed.

2. Remove the top cover of the MS detector as described in the topic **Removing the Top Cover of the MS Detector** on page 5-22.
3. Remove the left side cover of the MS detector, as follows:
    a. Loosen the fastener that secures the left side cover to the chassis of the MS detector.

b. Slide the side cover back about 1.25 cm (0.5 in.), and then pull it out and away from the MS detector.

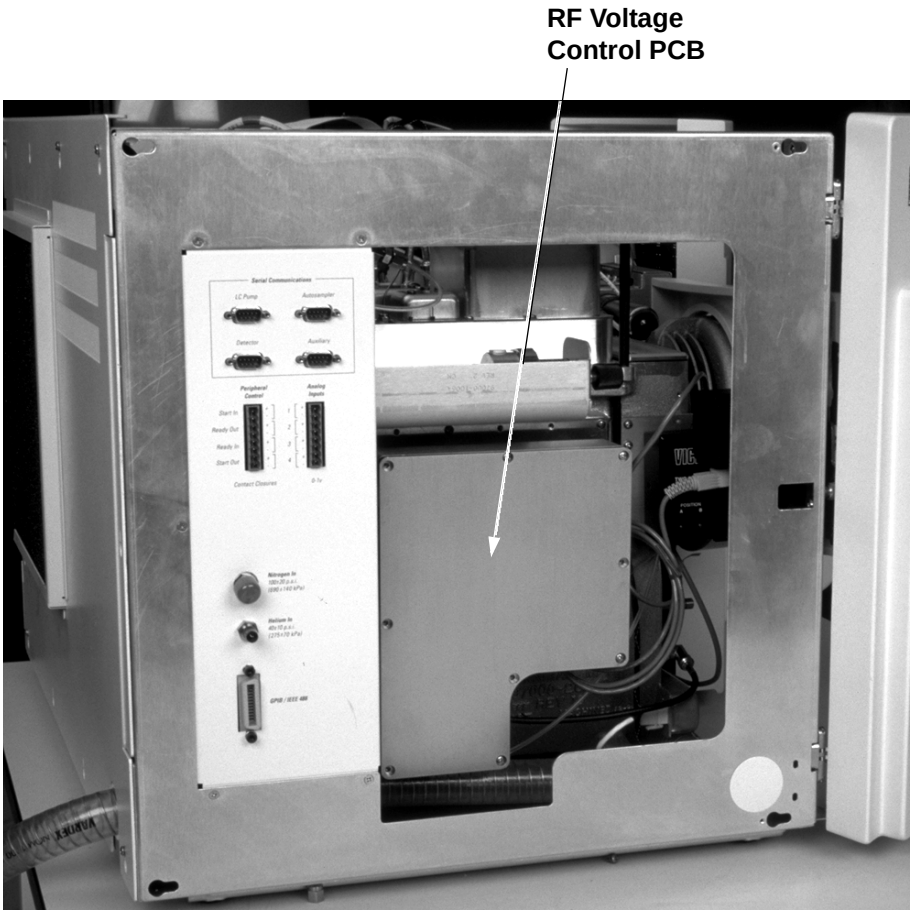

Figure 8-6. Left side of the MS detector, showing the RF Voltage Control PCB

> **Caution.** To prevent damage to the electronics due to electrostatic discharge, attach an electrostatic discharge (ESD) strap to your wrist before continuing.

4. With a Phillips screwdriver, remove the nine screws that secure the front cover of the RF Voltage Control PCB. Remove the front cover to expose the RF Voltage Control PCB.
5. Disconnect the cable that comes from the RF Voltage Amplifier PCB.
6. Disconnect the cable that comes from the System Control PCB.
7. With a Phillips screwdriver, remove the screws that hold the RF Voltage Control PCB housing to the vacuum manifold. Remove the RF Voltage

Control PCB and its housing as a unit. Reinstall the cover plate on the housing.

8. Unpack the new RF Voltage Control PCB and housing (P/N 96000-61100). Retain the packing materials so that you can pack and ship the defective PCB and housing to the Thermo Electron San Jose Repair Center. Be sure to note the apparent problem or symptoms on the enclosed forms.
9. Position the new RF Voltage Control PCB and its housing against the vacuum manifold where the old assembly was located. With a Phillips screwdriver, reinstall the 21 screws that hold the RF Voltage Control PCB housing to the vacuum manifold.
10. With a Phillips screwdriver, remove the nine screws that hold the front cover of the RF Voltage Control PCB housing to the RF Voltage Control PCB housing. Remove the front cover to expose the RF Voltage Control PCB.
11. Reconnect the cable that comes from the System Control PCB.
12. Reconnect the cable that comes from the RF Voltage Amplifier PCB.
13. Position the front cover over the RF Voltage Control PCB. With a Phillips screwdriver, reinstall the screws that hold the front cover to the RF Voltage Control PCB housing.
14. Reinstall the left side cover of the MS detector as follows:
    a. Place the cover against the left side of the MS detector such that the studs on the cover insert into the guide slots in the MS detector chassis.
    b. Slide the side cover forward about 1.25 cm (0.5 in.) until the studs on the cover lock in the guide slots.
    c. Tighten by hand the fastener that secures the side cover to the chassis of the MS detector.
15. Reinstall the top cover of the MS detector as described in the topic **Reinstalling the Top Cover of the MS Detector** on page 5-34.
16. Place the electronics service switch in the Operating Position.
17. Run the Tune Plus diagnostics to verify that the system is operational.

Replacing the Low Pass Filter PCB

To replace the Low Pass Filter PCB, proceed as follows. See Figure 8-7 for the location of the Low Pass Filter PCB.

1. Place the electronics service switch in the Service position (or shut down and vent the LCQ Deca XP MAX system as described in the topic **Shutting Down the System Completely** on page 6-5 in the **System Shutdown, Startup, and Reset** chapter).

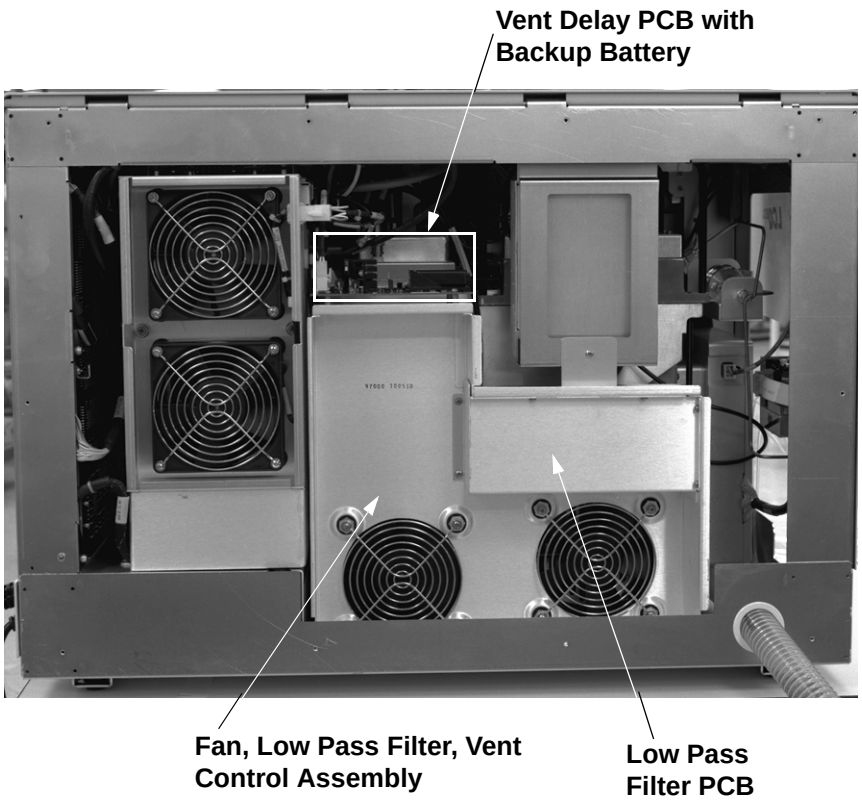

Figure 8-7. Rear view of the MS detector, showing the Vent Delay PCB and Low Pass Filter PCB

CAUTION. Make sure that the LCQ Deca XP MAX electronics service switch is in the Service position (or shut down the system and disconnect the power cord) before you proceed.

2. Remove the top cover of the MS detector as described in the topic **Removing the Top Cover of the MS Detector** on page 5-22.
3. Remove the rear cover of the MS detector as follows:
   a. With a Phillips screwdriver, loosen the 10 screws that secure the rear cover to the chassis of the MS detector.
   b. Slide the rear cover up about 1.25 cm (0.5 in.), and then lift it out and away from the MS detector.
4. Disconnect the two coaxial cables from the BNC connectors that are located on the rear of the Low Pass Filter PCB.

> **Caution.** To prevent damage to the electronics due to electrostatic discharge, attach an electrostatic discharge (ESD) strap to your wrist before continuing.

5. With a Phillips screwdriver, remove the 8 screws that hold the metal cover of the Low Pass Filter PCB to the fan, low pass filter, vent control assembly. Remove the metal cover.
6. With a Phillips screwdriver, remove the screws that hold the Low Pass Filter PCB to the fan, low pass filter, vent control assembly. Remove the Low Pass Filter PCB.
7. Unpack the new PCB (P/N 97000-61380). Retain the packing materials so that you can pack and ship the defective PCB to the Thermo Electron San Jose Repair Center. Be sure to note the apparent problem or symptoms on the enclosed forms.
8. Position the new Low Pass Filter PCB in the place that was occupied by the old PCB. With a Phillips screwdriver, reinstall the screws that hold the Low Pass Filter PCB to the fan, low pass filter, vent control assembly.
9. Position the metal cover over the Low Pass Filter PCB. With a Phillips screwdriver, reinstall the 8 screws that hold the metal cover of the Low Pass Filter PCB to the fan, low pass filter, vent control assembly.
10. Reconnect the two coaxial cables to the BNC connectors that are located on the rear of the Low Pass Filter PCB.
11. Reinstall the rear cover of the MS detector as follows:
    a. Place the cover against the rear of the MS detector such that the screws in the MS detector chassis insert into the guide slots on the rear cover.
    b. Slide the rear cover down about 1.2 cm (0.5 in.) until the screws lock in the guide slots on the cover.
    c. With a Phillips screwdriver, tighten the ten screws that secure the rear cover to the chassis of the MS detector.
12. Reinstall the top cover of the MS detector as described in the topic **Reinstalling the Top Cover of the MS Detector** on page 5-34.
13. Place the electronics service switch in the Operating Position.
14. Run the Tune Plus diagnostics to verify that the system is operational.

Chapter 9
LCQ Advantage MAX Replaceable Parts

This chapter contains part numbers for replaceable and consumable parts for the MS detector, data system, and kits. To ensure proper results in servicing the LCQ Advantage MAX system, order only the parts listed or their equivalent.

For information on how to order parts, refer to the topic **Replaceable Parts** in the **LCQ Advantage MAX Preinstallation Requirements Guide**.

9.1 MS Detector

Replaceable parts are available to support the following:

- ESI probe assembly
- APCI probe assembly
- API probe guide
- API stack
- Ion optics
- Mass analyzer
- Ion detection system (electron multiplier/conversion dynode)
- Top cover plate of vacuum manifold
- Divert/inject valve
- Syringe pump
- Turbomolecular pump
- Forepump
- Vacuum assemblies
- Mechanical assemblies
- Electrical assemblies
- Printed circuit boards (PCBs)
- RF control/detection assemblies
- Cables
- Covers

For replaceable parts for the ESI Probe Assembly and APCI Probe Assembly, refer to the **Finnigan Ion Max API Source Hardware Manual**. For all other replaceable parts, refer to the following lists.

API Stack

Assembly, API Stack 97134-60003
- **Assembly, API, interconnect 97000-63002**
- **Assembly, capillary heater 97144-60160**
- **Clip, mount, skimmer and tube lens 97144-10006**
- **Cone, ion sweep 97144-20006**
- **Cone, spray shield 97144-20004**
- **Fitting, 3/8-in. hose, 1 1/2-in. × 13, UNC, male 97000-20269**
- **Mount, extension 97144-20007**
- **Mount, skimmer and tube lens, 0.060 OFFSET 97144-20008**
- **Nut, thumb, 6-32, knurled, 303 stainless steel 2804- 2748**

O-ring, 0.739-in. ID, 0.070-in. thick, Viton **00107-10100**
O-ring, 0.375-in. ID, 1/16-in. thick, Viton **00107-05500**
O-ring, 3.875-in. ID, 3/16-in. thick, Viton **00107-14100**
O-ring, 0.30-in. ID, D, 0.064 W, Kalrez®, compound 4079 ..... **00107-12750**
Plunger, ball, 6-40, 0.310 long, 1 lb-ft **00201-11719**
Screw-set, socket HD, #6-32 × 5/8-in., stainless steel **8311- 0610**
Screw, pan head, Phillips, 4-40 × 1/4-in., stainless steel **00415-44004**
Screw, Socket, 6-32 × 3/8-in., stainless steel **00419-63206**
Seal graphite source heater **70111-20216**
Seal/Insulator, spray-shield **97144-20107**
Skimmer **97000-20201**
Spring, wave, stainless steel **00201-11599**
Tube lens **97000-20200**
Tube, ion transfer, 450 micron **97133-20001**
Washer, stepped **70111-20097**

Assembly, Capillary Heater **97144-60160**
Assembly, lower block/heater **97144-60150**
Ball, tungsten-carbide, 5/16-in. diameter, grade 25T **00007-00660**
Block heater, upper source-heater **70111-20093**
Cap Valve port source-heater **70111-20101**
Insulator, heater block **97144-20005**
Screw socket, 2-56 × 3/16-in., stainless steel **00419-25603**
Screw, buttonhead, socket, 2-56 × 1/8-in. L, stainless steel, temp **00452-25610**
Screw, pan head, Phillips, 4-40 × 3/16-in., stainless steel **00415-44003**
Spring, heater block **97144-10004**
Spring, heater-clip, source-heater **70111-20128**
Spring, sensor clip, source-heater **70111-20134**

Ion Optics

Lens, interoctapole 97114-20004

Mount, trap 70333-20015

Mount, octapole 97033-20035

Octapole, non-split (second), 2.0-in. long, welded 97000-60016

Octapole, split (first), 2.0-in. long, welded 97033-60230

Thumb screw, 10-32 97000-20235

Kit, Feedthrough, 4 Pin **97000-62004**
Feedthrough, 4 pin, modified **97000-98016**
O-ring, 0.737-in. ID, 3/32-in. thick, Viton **00107-10056**
Screw, pan head, Phillips, 6-32 × 1/2-in., stainless steel **00415-63208**
Spacer, 4 pin feedthrough **97000-20226**

Kit, Feedthrough, 8 Pin **97000-62008**
Feedthrough, 8 pin **96000-20115**

O-ring, 0.737-in. ID, 3/32-in. thick, Viton 00107-10056
Screw, pan head, Phillips, 6-32 × 1/2-in., stainless steel 00415-63208
Spacer, 8 pin feedthrough 97000-20225

Mass Analyzer

Electrode, ring 96000-20016

Electrode, endcap, entrance/exit 97044-20000

Exit lens 97000-20205

Mount, analyzer 97033-20015

Nipple, damping gas 96000-20117

Nut 97000-20339

Post 97000-20338

Sleeve, exit lens 97044-20001

Sleeve, octapole adapter 97033-20014

Spacer, ring 97000-20302

Spring washer, 0.33-in. ID, 0.49-in. OD, stainless steel 00474-11618

Tubing, Teflon, 14 gauge, 0.016-in. wall thickness 00007-94320

Ion Detection System (Electron Multiplier / Conversion Dynode)

Disk, shield, dynode 97000-20263

Shield, dynode 97000-20210

Kit, Conversion Dynode 97000-62085
Feedthrough, dynode 97000-60171
O-ring, 1.37-in. ID, 0.103-in. thick, Viton 00107-10400
Screw, pan head, Phillips, 6-32 × 1/2-in., stainless steel 00415-63208
Spring, coil, 1.358-in. ID, 0.083-in. height. 00201-11680
Tube, shield, dynode 97000-20275

Kit, Electron Multiplier 96000-62019
Anode, electron multiplier 96000-20076
Feedthrough, high voltage 96000-20073
Feedthrough, electron multiplier 96000-20072
O-ring, 0.375-in. ID, 0.103-in. thick, Viton 00107-07000
O-ring, 0.688-in. ID, 0.103-in. thick, Viton 00107-09500
Screw, socket, cap, 2-56 × 1/8-in., vented, stainless steel 00452-20000

Assembly, Electron Multiplier 96000-60036
Cathode (insert), electron multiplier 00022-02400

Screw, pan head, Phillips, 2-56 × 1/4-in., vented, stainless steel **00452-25605**
Washer, wave, 0.731-in. OD × 0.588-in. ID **00471-50080**
Ring, high voltage **96000-20074**
Shield, electron multiplier **96000-20071**
Support, electron multiplier **96000-20070**
Support plate, electron multiplier **96000-20077**
Tube, high voltage connection **96000-20078**

Top Cover Plate of Vacuum Manifold

Assembly, Top Cover **97133-60020**
Connector, Swagelok®, modified **96000-30005**
Fitting, Swagelok, ferrule, 1/8-in., tee set **00101-09250**
Fitting, Swagelok, nut knurled, 1/8-in., brass **00101-12902**
Nipple, damping gas **96000-20117**
Pin guide, large top cover **97000-20267**
Pin guide, top cover **97000-20222**
Pin, PCB, top cover **97000-20223**
Plate, top, manifold **97000-20133**

Kit, Handle Top Cover, 8-in. **97000-62003**
Handle, 8-in., top cover **97000-20220**

Divert/Inject Valve (Option)

Kit, Divert/Inject Valve Assembly **97033--62190**
Bracket, Divert Valve **97033-10024**
Divert/inject valve, 24 V dc **00110-09998**
Ferrule, Valco 1/16 HPLC stainless steel **00101-18122**
Screw, flat, Phillips, 8-32 × 3/8-in., zinc **00407-83205**
Screw, pan head, Phillips, 6-32 × 3/8-in., stainless steel **00415-63206**
Valve-Acc Nut, Valco 1/16 PHLC, stainless steel **00110-16008**
LC-Acc, Valco 20 µL Sample Loop, stainless steel **00301-30000**

Syringe Pump

Syringe Pump, Modified, TSP 97033-98020

Turbomolecular Pump

O-ring, 4.100-in. ID, 3/16-in. thick, Viton 00107-11100

Lubrication oil reservoir, felt, turbomolecular pump TMH 261 00950-01117

Bar, left turbo mount, ... 97033-20028

Bar, right turbo mount, ... 97033-20026

Hinge, left turbo mount 97033-20029

Hinge, right turbo mount 97033-20027

Pump, turbomolecular, TMH 261/130, 200 L/s 00108-02644

Screw, socket, 1/4-in. × 20 × 1.25-in. long, stainless steel 00419-42019

Washer, flat, 5/16-in. ID, 0.062-in. thick, stainless steel 00472-02500

Forepump

Interconnect Kit, Forepump with hardware, 220 V ac 97000-62016
- **Adapter, hose 25 mm 00108-09005**
- **Clamp, hose, adjustable, 0.81-in. to 1.5-in., stainless steel 00108-09001**
- **Pump oil, vacuum, 1 L 00301-15101**
- **Pump, rotary-vane, 650 L/min, 220 V ac, 50/60 Hz 00108-02655**
- **Vacuum hardware, clamp, KF20/25 ..... 00102-10020**

Vacuum System Assemblies

Assembly, Vent Valve 97000-60128
- **Filter, sintered nylon 00201-06050**
- **Fitting, Swagelok, male adapter, 1/8-in. MPT × 1/4-in. 00101-01740**
- **Fitting, Swagelok, O-seal, 1/4-in. tube, 7/16-in. × 20 ..... 00101-13510**
- **O-ring, 0.468-in. ID, 0.078-in. thick, Viton 00107-07600**
- **Ribbon dope, 1/4-in. 00301-16501**
- **Valve, 2 way, solenoid, 6 V dc, 1/32-in., stainless steel, normally open 00110-10708**

Assembly, Foreline 97033-60200
- **Clamp, hose, adjustable, 0.81-in. to 1.5-in., stainless steel 00108-09001**
- **Hose, adapter, 25 mm 00108-09005**
- **Hose, PVC, reinforced, 1.0-in. ID, 1.25-in. OD, 1.5 ft. (0.5 m) *l* 00301-24141**
- **Manifold, 3-way, angled 97033-20016**
- **Union, LCQ Advantage MAX, forelines, 90 degree 97000-20294**
- **Vacuum hardware, clamp, KF 20/25, steel 00102-10070**

Assembly, Helium, Inlet 97033-60200
- **Ferrule, 1/8-in. to 0.4 mm, graphite / Vespel 00101-18115**
- **Fitting, Swagelok, bulkhead-union, 1/8-in. × 1/8-in., brass 00101-02101**
- **Fitting, Swagelok, plug, 1/8-in. FPT, brass 00101-02210**
- **Regulator, 0-10 psi, 1/8-in., NPT, stainless steel 00105-03015**
- **Tubing, fused silica, 0.075 mm ID 0.67 ft. (0.2 m) *l* 00106-10520**
- **Tubing, Teflon, 0.125-in. OD, 0.030-in. width, FEP 00101-50000**

Kit, Hose Adapter 97000-62005
- **Adapter, pump manifold, 1.0-in. hose to wall 97000-60185**
- **Convectron™ gauge 00105-00501**
- **O-ring, 0.862-in. ID, 0.103-in. thick, Viton 00107-15350**

Ribbon dope, 1/4-in. 00301-16501
Screw, pan head, Phillips, 6-32 × 1-1/2-in., stainless steel 00425-63224

Kit, Lid Manifold 97000-62006
Manifold lid 97000-20243
O-ring, 3.6-in. ID, 0.21-in. thick, Viton 00107-14050
Screw, pan head, Phillips, 6-32 × 3/8-in., stainless steel 00415-63206

Kit, Ion Gauge 97000-62010
Dynode shield, ... 97000-20282
Ion gauge, mini, 0.75-in. OD tube 00105-01525
O-ring, 0.737-in. ID, 3/32-in. thick, Viton 00107-10056
Sleeve, 0.75-in. ID, O-ring compression 97000-20211
Sleeve, threaded O-ring seal 97000-20212

Mechanical Assemblies

Cover, top, octapole RF voltage coil 97000-60162

Fan, embedded computer 00013-00243

Fan, low pass filter, vent control 97033-60130

I/O panel, ... 97033-60120

Electrical Assemblies

Power supply, 8 kV, 100 µA, without bracket (ESI / APCI) 97000-98041

Power supply, electron multiplier / conversion dynode,
±15 kV at 1 µA, 0 to –2.5 kV at 230 µA 97000-98042

Assembly, Power Module 97033-60100
Circuit breaker, 10 A, double-pole, high in-rush 00019-00505
Circuit breaker, 2 pole, 10 A, 230 V ac 00019-00508
Connector, panel, power inlet, IEC 320/C20 00004-89660
Filter, line, 20 A, screw terminal 00007-18349
Nut, hex-KEP, 6-32, stainless steel 00461-26320
Screw, flat, Phillips, 4-40 × 3/8-in., stainless steel 00407-44006
Screw, pan head, Phillips, 6-32 × 1/2-in., stainless steel 00415-63208
Surge absorber PCB 70005-61090

Power supply, switching, +48 V, +24 V 97133-60060

Power supply, switching, +36 V (11 A), -28 V (4.2 A) 97033-60022

Power supply, switching, +5 V, ±15 V, +24V, 200 W 97033-60021

Power supply, linear, +/- 210 V 97033-60024
Fuse, 0.315 A, 5 x 20, 250 V, time lag 00006-04550

Printed Circuit Boards (PCBs)

PCB, Dc Ring Filter 96000-61130

PCB, Divert / Inject Valve 97033-61100

PCBs, Embedded Computer
- **PCB, Acquisition DSP 97000-61260**
- **PCB, Computer Mainboard 97033-60040**
- **PCB, Control DSP 97000-61270**
- **PCB, Ethernet, SMC, ... 97033-60280**
- **PCB, ISA, Computer support 97033-61020**
- **PCB, RS 485/232 Converter 97033-61110**
- **PCB, Serial I/O (RS-232, 8 Port) 97000-60124**
- **PCB, Waveform DDS 97033-61130**

PCB, Front Panel 97033-61090

PCB, I/O Panel 97033-61040

PCB, Low Pass Filter 97000-61380

PCB, RF Voltage Amplifier 96000-61090

- **Fuse, 0.50 A, 5 × 20 mm, 250 V, quick acting, (F2) 00006-07608**
- **Fuse, 1.00 A, 5 × 20 mm, 250 V, quick acting, (F1) 00006-07610**

PCB, RF Voltage Control 96000-61100

PCB, Service Relay 97033-61120

PCB, Syringe Pump Control 97033-61030

PCB, System Control 97033-61016
- **Fuse, 0.90 A, HLD, Reset, PTC resistor 00006-30090**
- **Fuse, 3.15 A, 5 × 20 mm, 250 V, time lag (F10) 00006-10510**

PCB, Switched Balun 97033-61060

PCB, Top Cover 97033-61050

PCB, Vent Delay 97000-61370
- **Battery, 7.2 V, nickel / cadmium 00301-05720**

PCB, Waveform Amplifier 96000-61110

RF Control / Detection Assemblies

Assembly, RF Tuning 97000-60141
- **Assembly, RF detector 97000-60078**
- **Assembly, RF plate ceramic 97000-60133**
- **Connector, coax, BNC bulkhead jack, RU-58 ..... 00004-33000**
- **RF detector lid housing 97000-20186**
- **RF detector plate insulator 96000-20048**
- **RF detector ring shield 97000-20266**

Screw, pan head, Phillips, 6-32 × 3/8-in., stainless steel 00415-63206
Stud, fine tuning 97000-20322
Terminal lug, ring, # 6, solder 00007-41500
Terminal lug, ring, 3/8-in., solder 00007-39500
Tubing, Teflon, 18 gauge, 0.016-in. wall thickness 00007-94330
Tuning bell, RF coil 96000-20068

Kit, RF Feedthrough 96000-62024
O-ring, 1.37-in. ID, 0.103-in. thick, Viton 00107-10400
Screw, pan head, Phillips, 6-32 × 1/2-in., stainless steel 00415-63208
RF feedthrough 97000-60169

Cables

Cable kit, top assembly 97133-62020

Cable, System Control PCB – RF Voltage Control PCB (ribbon) 97000-63015

Cable, interconnect (embedded computer), Control DSP PCB – Acquisition DSP PCB (ribbon) 97000-63031

Cable, RF Voltage Control PCB – RF Voltage Amplifier PCB 97000-63047

Cable, System Control PCB – RF Voltage Amplifier PCB – Waveform DDS PCB (ribbon) 97000-63048

Cable, System Control PCB – spray shield – external interconnect 97000-63050

Cable, Sheath / Aux gas valve – I/O PCB 97000-63051

Cable, switching power supply – embedded computer fan – RF Voltage Control PCB fan – interconnect to tower fans 97033-63002

Cable, Service Relay PCB – RF coil fan – tower fan 97033-63010

Cable, reset button – Service Relay PCB – I/O PCB – Support PCB – Syringe Pump Controller – embedded computer fan 97033-63030

Cable, AC Power Module harness assembly 97033-63040

Cable System Control PCB – Front Panel APCI Heater Connector – Service Relay PCB 97134-63010

Cable, I/O PCB – System Control PCB, LC I/O 97033-63070

Cable, Top Cover PCB – Acquisition DSP PCB 97033-63080

Cable, System Control PCB – DC Ring Filter – Top Cover PCB – Switched Balun PCB 97033-63090

Cable, Waveform Amplifier PCB – Switched Balun PCB 97033-63100

Cable, Vent Delay PCB – vent valve 97033-63110

Cable, RF amplifier PCB – low pass filter 97033-63120

Cable, I/O PCB – Front Panel PCB 97033-63130

Cable, Ethernet PCB (embedded computer) – power panel, coax 97033-63140

Cable, Waveform DDS PCB – WF Amplifier PCB – RF Amplifier PCB 97033-63150

Cable, System Control PCB – API stack spray shield 97033-63180

Cable, I/O Panel – syringe pump controller 97033-63200

Cable, embedded computer mainboard– Support PCB power 97033-63220

Cable, embedded computer fan 97033-63230

Cable, System Control PCB – electron multiplier / conversion dynode power supply 97033-63290

Cable, conversion dynode/electron multiplier power supply – top cover plate 97033-63300

Cable, System Control PCB – ion gauge – convectron gauge 97033-63310

Cable, divert valve – front panel LED 97033-63320

Cable, System Control PCB – Control DSP PCB, high speed serial 97033-63330

Cable, low pass filter – main RF coil 97033-63340

Cable, Waveform DDS PCB – Control DSP PCB 97033-63350

Cable, System Control PCB – RF Voltage Amplifier PCB– Waveform Amplifier PCB 97033-63360

Cable, PCI-DDS power – Support PCB 97033-63370

Cable, 8 KV panel supply 97134-63020

Covers

Cover, Analyzer PCB, small 97000-98033

Cover, balun, shield 97033-98070

Cover, box, balun 97000-98032

Cover, low pass filter 97033-10027

Cover, RF Voltage Amplifier PCB 97000-10028

Cover, System Control PCB 97033-10009

Cover, Waveform Amplifier PCB 97000-10029

Cover, zero box, RF voltage detector 97000-20262

9.2 Data System – Hardware

Kit, Data System, Hardware 97044-62111
- **Cable, thinwire Ethernet 97044-63060**
- **CD ROM, Norton Utilities 2001 ..... 00800-00105**
- **Computer system 00825-01120**
- **Connector, T-Connector, thinwire Ethernet 00012-50967**
- **Software, MS Microsoft Office XP Suite 00800-00222**
- **Terminator, thinwire Ethernet 00950-00918**

9.3 Chemicals Kit

Kit, Chemicals 97000-62042
- **Caffeine, 1 mg/mL, in methanol 00301-12310**
- **Reserpine, 1 gram 00301-12901**
- **Met-Arg-Phe-Ala (MRFA), solids 00301-07702**
- **Sample, Met-Arg-Phe-Ala (MRFA), solids, 10 mg each 40061-60002**

9.4 Accessory Kit

Accessory Kit **97134-62003**
- **Air duct, 1.0-in. ID, flex, blue, 15 ft. (4.5 m) *l*** **00301-08301**
- **Box, accessory** **97000-01005**
- **Cable, shielded, 2-twisted pair, 22 gauge, 24 ft. (7 m) *l*** **00302-01800**
- **Chemicals kit** **97000-62042**
- **Ferrule, Finger-Tight™ 2, Upchurch (3 each)** **00101-18196**
- **Ferrule, Tefzel, 1/16-in., electrospray (2 each)** **00102-10148**
- **Ferrule, 0.008-in. ID, KEL-F, HPLC (4 each)** **00101-18114**
- **Ferrule, 0.016-in. ID, PEEK, HPLC (4 each)** **00101-18120**
- **Fitting, ferrule, 1/8-in., Tefzel (2 each)** **00101-18199**
- **Fitting, ferrule, Swagelok, back, 1/4-in. (2 each)** **00101-04000**
- **Fitting, ferrule, Swagelok, front, 1/4-in. (2 each)** **00101-10000**
- **Fitting, ferrule, Swagelok, front, 1/8-in. (2 each)** **00101-08500**
- **Fitting, ferrule, Swagelok, back, 1/8-in. (2 each)** **00101-02500**
- **Fitting, Finger-Tight™ 2, Upchurch (2 each)** **00101-18195**
- **Fitting, HPLC union, 0.010-in. orifice, PEEK (2 each)** **00101-18202**
- **Fitting, HPLC, tee, 0.020-in. orifice, PEEK (1 each)** **00101-18204**
- **Fitting, Swagelok, nut, 1/4-in., brass (1 each)** **00101-12500**
- **Fitting, Swagelok, nut, 1/8-in., brass (2 each)** **00101-15500**
- **Fuse, 0.16 A, 5 × 20 mm, 250 V, time lag (8 each)** **00006-01700**
- **Fuse, 0.25 A, 5 × 20 mm, 250 V, time lag (2 each)** **00006-11204**
- **Fuse, 0.315 A, 5 × 20 mm, 250 V, time lag (2 each)** **00006-04550**
- **Fuse, 0.40 A, 5 × 20 mm, 250 V, time lag (4 each)** **00006-05080**
- **Fuse, 0.50 A, 5 × 20 mm, 250 V, quick acting (2 each)** **00006-07608**
- **Fuse, 1.00 A, 5 × 20 mm, 250 V, quick acting (2 each)** **00006-07610**
- **Fuse, 3.15 A, 5 × 20 mm, 250 V, time lag (4 each)** **00006-10510**
- **Hose, PVC, reinforced, 28, 1.5 ft. (0.5 m) *l*** **00301-24141**
- **Manual, HPLC troubleshooting (1 each)** **00920-05914**
- **Needle, corona discharge** **70005-98033**
- **Needle, ESI, D point, 26 gauge, 51 mm. (2-in) *l* 1 each** **00950-00990**
- **Nut, flangeless, 1/16-in., electrospray (1 pack)** **00102-10146**
- **O-ring, 0.299-in. ID × 0.103-in. thick, Kalrez** **00107-10059**
- **O-ring, 0.30-in. ID, D × 0.04 W, Kalrez, CMPD: 4079** **00107-12750**
- **Pump oil, rotary-vane vacuum pump, 1 L** **00301-15101**
- **Seal, ESI needle, 5000 series** **00950-00952**
- **Seal, graphite, source heater** **70111-20216**
- **Syringe, 250 µL, Gastight®, removable needle (2 each)** **00301-19015**
- **Syringe, 500 µL Gastight, removable needle (1 each)** **00301-19016**
- **Tool, capillary removal** **70001-20258**
- **Tool, needle seal removal** **70005-20304**
- **Tube, hypodermic 28 gauge × 10-in. (254 mm), L304 stainless steel (1 each)** **00106-20000**
- **Tube, ion transfer, 450 µm** **97133-20001**
- **Tubing, 0.25-in. OD × 0.062-in. wall thickness, PFA, 15 ft. (4.5 m) *l*** **00101-50100**

Tubing, fused silica, 0.150 mm ID × 0.390 mm OD,
2 ft. (0.6 m) *l* 00106-10498
Tubing, fused silica, 0.050 mm ID × 0.190 mm OD,
6 ft. (1.8 m) *l* 00106-10502
Tubing, fused silica, 0.1 mm ID × 0.4 mm OD, deactivated
3 ft. (1 m) 00106-10504
Tubing, fused silica, 0.1 mm ID × 0.190 mm OD,
6 ft. (1.8 m) *l* 00106-10499
Tubing, PVC, unreinforced, clear, 3/8-in. ID,
10 ft. (3 m) *l* 00301-22895
Tubing, PEEK, red, 0.005-in. ID × 1/16-in. OD,
5 ft. (1.5 m) *l* 00301-22912
Wrench, Allen / Hex 1/4-in. ball point 00725-00022

9.5 Recommended Spares

Battery, 7.2 V, nickel / cadmium 00301-05720

Bushing, snap, 1.75-in. diameter, white plastic 00201-19081

Dc ring filter box 97000-98004

Fan gasket 97000-20298

Fan, 100 cfm, 24 V dc 00013-00243

Fan, kit 97000-62021

Filter, fan 97000-20299

Finger guard 00007-18600

Fitting, Swagelok, bulkhead-union, 1/8-in. × 1/8-in., stainless steel 00101-02102

Foot, bumper 00007-18115

Fuse, 0.16 A, 5 × 20 mm, 250 V, time lag 00006-01700

Fuse, 0.25 A, 5 × 20 mm, 250 V, time lag 00006-11204

Fuse, 0.40 A, 5 × 20 mm, 250 V, time lag 00006-05080

Fuse, 0.50 A, 5 × 20 mm, 250 V, quick acting 00006-07608

Fuse, 1.00 A, 5 × 20 mm, 250 V, quick acting 00006-07610

Fuse, 1.60 A, 5 × 20 mm, 250 V, quick acting 00006-08610

Fuse, 2.50 A, 5 × 20 mm, 250 V, Type F 00006-11202

Fuse, 3.15 A, 5 × 20 mm, 250 V, time lag 00006-10510

Hinge, open 180 degree 00250-08003

Nut, hex-KEP, 6-32, cadmium plated 00460-16321

Nut, hex-KEP, 8-32, stainless steel 00461-28320

Plug, 1.75-in. diameter, white, nylon 00201-20500

Pump oil, turbomolecular, reservoir, felt, TPH 240 00950-01116

Pump oil, rotary-vane vacuum pump, 1 L 00301-15101

Screw, pan head, Phillips, 6-32 × 1 3/4-in., zinc plated 00405-63228

Screw, pan head, Phillips, 6-32 × 1/2-in., stainless steel 00415-63208

Screw, pan head, Phillips, 6-32 × 1/4-in., stainless steel 00415-63204

Screw, pan head, Phillips, 6-32 × 3/8-in., stainless steel 00415-63206

Screw, pan head, slot, 2-56 × 1/4-in., stainless steel 00414-25604

Screw, pan head, slot, 6-32 × 1/4-in., cadmium plated 00404-63204

Stud, ball, 6-32 × 0.375-in. 00201-12110

Switchcap, manifold cover, interconnect 97000-40009

Switchcap, right door, interconnect 97000-40010

Tubing, Teflon, 18 gauge, 0.016-in. wall thickness 00007-94330

Valve assembly, sheath/aux gas, dual manifold 00110-20014

Washer, flat, #6, stainless steel 00472-00600

Washer, interlock, 5/16-in. ID, stainless steel 00479-04400

9.6 Divert / Inject Valve Accessories

Ferrule, HPLC 1/16-in. stainless steel, Valco 00101-18122

Syringe adapter, 1/16-in. fill port liner / ferrule, Valco 00110-16002

Syringe adapter, 1/16-in. fill port, Valco 00110-16000

Valve, replacement nut, 1/16-in. HPLC, stainless steel 00110-16008

Valve, replacement rotor seal, Valco 00110-16006

Valve, replacement stator, Valco 00110-16004

5 µL sample loop, stainless steel, Valco 00110-16010

20 µL sample loop, stainless steel, Valco 00301-30000

9.7 Optional Tools

Hexdriver, 0.28-in. 00025-01810

Hexdriver, 0.35-in. 00025-08041

Tool pin extractor, AMP, large 00725-00013

Tool pin extractor, AMP, small 00725-00020

Wrench, Allen / hex drive, 1/4-in. (with handle) 00725-00015

Tool, capillary removal 70111-20258

Tool, removal, TEE seal 70005-20304

Chapter 10
LCQ Deca XP MAX Replaceable Parts

This chapter contains part numbers for replaceable and consumable parts for the MS detector, data system, and kits. To ensure proper results in servicing the LCQ Advantage MAX system, order only the parts listed or their equivalent.

For information on ordering parts, refer to the topic **Replaceable Parts** in the **LCQ Series Preinstallation Requirements Guide**.

10.1 MS Detector

Replaceable parts are available to support the following:

- ESI probe assembly
- APCI probe assembly
- API probe guide
- API stack
- Ion optics
- Mass analyzer
- Ion detection system (electron multiplier/conversion dynode)
- Top cover plate of vacuum manifold
- Divert/inject valve
- Syringe pump
- Turbomolecular pump
- Rotary-vane pumps
- Vacuum system assemblies
- Mechanical assemblies
- Electrical assemblies
- Printed circuit boards (PCBs)
- RF control/detection assemblies
- Cables
- Covers

For replaceable parts for the ESI Probe Assembly and APCI Probe Assembly, refer to the **Finnigan Ion Max API Source Hardware Manual**. For all other replaceable parts, refer to the following lists.

API Stack

Assembly, API Stack **97345-60004**
- **Assembly, API, interconnect** **97000-63002**
- **Assembly, capillary heater** **97144-60160**
- **Assembly, sprayshield** **97144-60111**
- **Clip, mount, skimmer and tube lens** **97144-10006**
- **Cone, ion sweep** **97144-20006**
- **Cone, spray shield** **97144-20004**
- **Container, shipping API stack** **00707-10014**
- **Fitting, 3/8-in. hose, 1 1/2-in. × 13, UNC, male** **97000-20269**
- **Lens, interoctapole** **97044-20004**

Mount, extension **97144-20007**
Mount, skimmer and tube lens, .060 OFFSET **97144-20008**
Nut, thumb, 6-32, knurled, 303 stainless steel **2804- 2748**
O-ring, 0.739-in. ID, 0.070-in. thick, Viton **00107-10100**
O-ring, 0.375-in. ID, 1/16-in. thick, Viton **00107-05500**
O-ring, 3.875-in. ID, 3/16-in. thick, Viton **00107-14100**
O-ring, 0.30-in. ID, D, 0.064 W, Kalrez®, compound 4079 ..... **00107-12750**
Plunger, ball, 6-40, 0.310 long, 1 lb-ft **00201-11719**
Screw-set, socket HD, #6-32 × 5/8-in., stainless steel **8311- 0610**
Screw, pan head, Phillips, 4-40 × 1/4-in., stainless steel **00415-44004**
Screw, Socket, 6-32 × 3/8-in., stainless steel **00419-63206**
Seal, graphite source heater **70111-20216**
Seal, insulator, spray-shield **97144-20107**
Skimmer (LCQ Deca XP) **97144-20009**
Skimmer (LCQ Deca XP MAX) **97144-20070**
Spring, wave, stainless steel **00201-11599**
Tube lens **97000-20200**
Tube, ion transfer, 550 µm **97133-20001**
Washer, stepped **70111-20097**

Assembly, Capillary Heater **97144-60160**
Assembly, lower block/heater **97144-60150**
Ball, tungsten-carbide, 5/16-in. diameter, grade 25T **00007-00660**
Block heater, upper source-heater **70111-20093**
Cap Valve port source-heater **70111-20101**
Insulator, heater block **97144-20005**
Screw socket, 2-56 × 3/16-in., stainless steel **00419-25603**
Screw, buttonhead, socket, 2-56 × 1/8-in. L, stainless steel, temp **00452-25610**
Screw, pan head, Phillips, 4-40 × 3/16-in., stainless steel **00415-44003**
Spring, heater block **97144-10004**
Spring, heater-clip, source-heater **70111-20128**
Spring, sensor clip, source-heater **70111-20134**

Ion Optics

Lens, interoctapole 97144-20032

Mount, analyzer 97044-20005

Mount, quadrupole (formerly named octapole mount) 97000-20164

Octapole, 2.0-in. long, welded 97000-60016

Quadrupole, 2.0-in. long 97044-60060

Thumb screw, 10-32 97000-20235

Kit, Feedthrough, 4 Pin **97000-62004**
Feedthrough, 4 pin, modified **97000-98016**

O-ring, 0.737-in. ID, 3/32-in. thick, Viton 00107-10056
Screw, pan head, Phillips, 6-32 × 1/2-in., stainless steel 00415-63208
Spacer, 4 pin feedthrough 97000-20226

Kit, Feedthrough, 8 Pin 97000-62008
Feedthrough, 8 pin 96000-20115
O-ring, 0.737-in. ID, 3/32-in. thick, Viton 00107-10056
Screw, pan head, Phillips, 6-32 × 1/2-in., stainless steel 00415-63208
Shield box, PCB 97000-10083
Spacer, 8 pin feedthrough 97000-20225

Mass Analyzer

Electrode, ring 96000-20016

Electrode, endcap, entrance/exit 97044-20000

Exit lens 97000-20205

Mount, analyzer 97044-20005

Nipple, damping gas 96000-20117

Nut 97000-20339

Post 97000-20338

Sleeve, entrance lens 97044-20002

Sleeve, exit lens 97044-20001

Spacer, ring 97000-20302

Spring washer, 0.33-in. ID, 0.49-in. OD, stainless steel 00474-11618

Tubing, Teflon, 14 gauge, 0.016-in. wall thickness 00007-94320

Ion Detection System (Electron Multiplier / Conversion Dynode)

Disk, shield, dynode 97000-20263

Shield, dynode 97000-20210

Kit, Conversion Dynode 97000-62085
Feedthrough, dynode 97000-60171
O-ring, 1.37-in. ID, 0.103-in. thick, Viton 00107-10400
Screw, pan head, Phillips, 6-32 × 1/2-in., stainless steel 00415-63208
Spring, coil, 1.358-in. ID, 0.083-in. height. 00201-11680
Tube, shield, dynode 97000-20275

Kit, Electron Multiplier 96000-62019
Anode, electron multiplier 96000-20076
Feedthrough, HV 96000-20073

Feedthrough, electron multiplier **96000-20072**
O-ring, 0.375-in. ID, 0.103-in. thick, Viton **00107-07000**
O-ring, 0.688-in. ID, 0.103-in. thick, Viton **00107-09500**
Screw, socket, cap, 2-56 × 1/8-in., vented, stainless steel **00452-20000**
Ring, high voltage **96000-20074**
Shield, electron multiplier **96000-20071**
Support, electron multiplier **96000-20070**
Support plate, electron multiplier **96000-20072**
Tube, high voltage **96000-20078**

Assembly, Electron Multiplier **96000-60036**
Cathode, electron multiplier **00022-02400**
Screw, pan head, Phillips, 2-56 × 1/4-in., vented, stainless steel **00452-25605**
Washer, wave, 0.731-in. OD × 0.588-in. ID **00471-50080**

Top Cover Plate of Vacuum Manifold

Assembly, Top Cover **97133-60020**
Connector, Swagelok®, modified **96000-30005**
Fitting, Swagelok, ferrule, 1/8-in., tee set **00101-09250**
Fitting, Swagelok, nut knurled, 1/8-in., brass **00101-12902**
Nipple, damping gas **96000-20117**
Pin guide, large top cover **97000-20267**
Pin guide, top cover **97000-20222**
Pin, PCB, top cover **97000-20223**
Plate, top, manifold **97000-20133**

Kit, Handle Top Cover, 8-in. **97000-62003**
Handle, 8-in., top cover **97000-20220**

Divert/Inject Valve (Option)

Interconnect Assembly, Divert/Inject Valve **97345-60002**
Divert/inject valve, 24 V dc **00110-09998**
Screw, flat, Phillips, 8-32 × 3/8-in., zinc **00407-83205**
Screw, pan head, Phillips, 6-32 × 3/8-in., stainless steel **00415-63206**
Spacer, 0.125-in. long, #6. ID, 1/4-in. OD, stainless steel **00007-68301**

Syringe Pump

Interconnect Kit, Syringe Pump **97000-62075**
Screw, pan head, Phillips, 6-32 × 3/8-in., stainless steel **00415-63206**
Syringe pump **97000-98021**

Turbomolecular Pump

Rail, turbomolecular pump, mount kit 97033-62200

Pump, turbo 00108-10010

Forepumps

Interconnect Kit, Forepump with hardware, 220 V ac (2 each) 97000-62016
- **Adapter, hose 25 mm 00108-09005**
- **Clamp, hose, adjustable, 0.81-in. to 1.5-in., stainless steel 00108-09001**
- **Pump oil, vacuum, 1 L 00301-15101**
- **Pump, rotary-vane, 650 L/min, 220 V ac, 50/60 Hz 00108-02655**
- **Vacuum hardware, clamp, KF20/25 ..... 00102-10020**

Vacuum System Assemblies

Assembly, Vent Valve 97000-60128
- **Filter, sintered nylon 00201-06050**
- **Fitting, Swagelok, male adapter, 1/8-in. MPT × 1/4-in. 00101-01740**
- **Fitting, Swagelok, O-seal, 1/4-in. tube, 7/16-in. × 20 ..... 00101-13510**
- **O-ring, 0.424-in. ID, 0.103-in. thick, Viton 00107-05550**
- **Ribbon dope, 1/4-in. 00301-16501**
- **Valve, 2 way, solenoid, 6 V dc, 1/32-in., stainless steel, normally open 00110-10708**

Assembly, Foreline Interconnect 97144-60170
- **Clamp, hose, adjustable, 0.18-in. to 1.5-in., stainless steel 00108-09001**
- **Clamp, hose, adjustable, 9/16-in. to 1-1/16-in., stainless steel screw 00108-10016**
- **Elbow, turbo, exhaust 70111-20104**
- **Hose adapter, 25 mm 00108-09005**
- **Hose, 1/2-in., steel reinforced 00301-24155**
- **Hose, 1-in., embedded poly spiral 00301-24141**
- **Screw, socket, cap, m4 × 20 mm, black oxide 00419-63222**
- **Tee, hose 1-in. × 1-in. × 1/2-in., aluminum 97144-20031**
- **Union, duo, forelines, 90 degrees 97000-20294**
- **Vacuum hardware, clamp, KF 20/25 ..... 00102-10020**

Assembly, Helium, Inlet 97000-60137
- **Ferrule, 1/8-in. to 0.4 mm, graphite / Vespel 00101-18115**
- **Fitting, Swagelok, bulkhead-union, 1/8-in. × 1/8-in., brass 00101-02101**
- **Fitting, Swagelok, plug, 1/8-in. FPT, brass 00101-02210**
- **Regulator, 0-10 psi, 1/8-in., NPT, stainless steel 00105-03010**
- **Tubing, fused silica, 0.075 mm ID 0.67 ft. (0.2 m) l 00106-10520**
- **Tubing, Teflon, 0.125-in. OD, 0.030-in. width, FEP 00101-50000**

Kit, Hose Adapter 97000-62005

Adapter, pump manifold, 1.0-in. hose to wall 97000-20215
Convectron™ gauge 00105-00501
O-ring, 0.862-in. ID, 0.103-in. thick, Viton 00107-15350
Ribbon dope, 1/4-in. 00301-16501
Screw, pan head, Phillips, 6-32 × 1-1/2-in., stainless steel 00425-63224

Kit, Ion Gauge 97000-62010
Dynode shield, ... 97000-20282
Ion gauge, mini, 0.75-in. OD tube 00105-01525
O-ring, 0.737-in. ID, 3/32-in. thick, Viton 00107-10056
Sleeve, 0.75-in. ID, O-ring compression 97000-20211
Sleeve, threaded O-ring seal 97000-20212

Mechanical Assemblies

Cover, top, octapole RF voltage coil 97000-60162

Fan, tower 97000-60153

Fan, low pass filter, vent control 97033-60130

Electrical Assemblies

Power supply, 8 kV, 100 µA, without bracket (ESI / APCI) 70005-98037

Transformer, 240 VA toroid 97000-98001

Assembly, Turbomolecular Pump Controller 97144-60040
Frequency, converter, Leybold, TPS 00108-10012
Power supply, switch, 24 V (85 A), 48V (4 A), 400 W 00012-24208

Assembly, Power Module 97044-60050
Circuit breaker, 15 A, double-pole, high in-rush 00019-00522
Circuit breaker, 2 pole, 10 A, 230 V ac, unmarked rocker 00019-00508
Connector, panel, power inlet, IEC 320/C20 00004-89660
Filter, line, 20 A, screw terminal 00007-18349
Fuse, 3.15 A, 5 × 20 mm, 250 V, time lag 00006-10510
Nut, hex-KEP, 10-32, stainless steel 00461-20320
Screw, flat, Phillips, 4-40 × 3/8-in., stainless steel 00407-44006
Screw, pan head, Phillips, 6-32 × 1/2-in., stainless steel 00415-63208
Shunt, insulated, mini wrap 00004-89551
Switching power supply, 24 V (1.1 A) 00012-52104

Module, Electron Multiplier / Conversion Dynode
Power Supply 97000-98042

Assembly, Switching Power Supply 97000-60151
Power supply, +36 V (11 A), -28 V (4.2 A) 00012-24223
Power supply, +5 V, ±15 V, +24V, 200 W 00012-24221

Printed Circuit Boards (PCBs)

PCB, Analyzer Top Cover 97033-61051

PCB, Analyzer Auxiliary 97000-61340

Fuse, 1.60 A, 5 × 20 mm, 250 V, quick acting, (F1 - F2) 00006-08610

PCB, DC Ring Filter 96000-61130

PCB, Divert / Inject Valve 97000-61390

PCBs, Embedded Computer
- **PCB, Acquisition DSP 97000-61260**
- **PCB, Control DSP 97000-61270**
- **PCB, CPU 97144-60260**
- **PCB, Ethernet, SMC 97033-60280**
- **PCB, Waveform DDS 97000-61430**

PCB, Front Panel 97000-61400

PCB, I/O Panel 97000-61421

PCB, Low Pass Filter 97000-61380

PCB, RF Voltage Amplifier 96000-61090
- **Fuse, 0.50 A, 5 × 20 mm, 250 V, quick acting, (F2) 00006-07608**
- **Fuse, 1.00 A, 5 × 20 mm, 250 V, quick acting, (F1) 00006-07610**

PCB, RF Voltage Control 96000-61100

PCB, Syringe Pump 97000-61410

PCB, System Control 97144-61016
- **PCB, System Control 97144-61016**
- **Fuse, 0.16 A, 5 × 20 mm, 250 V, time lag (F1 - F4) 00006-01700**
- **Fuse, 0.25 A, 5 × 20 mm, 250 V, time lag (F7) 00006-11204**
- **Fuse, 0.40 A, 5 × 20 mm, 250 V, time lag (F8 - F9) 00006-05080**
- **Fuse, 2.50 A, 5 × 20 mm, 250 V, type F (F6) 00006-11202**
- **Fuse, 3.15 A, 5 × 20 mm, 250 V, time lag (F5) 00006-10510**

PCB, Switched Balun 97033-61060

PCB, Vent Delay 97000-61370
- **Battery, 7.2 V, nickel / cadmium 00301-05720**

PCB, APCI, safety, interlock 97144-61020

PCB, Waveform Amplifier 96000-61110

RF Control / Detection Assemblies

Assembly, RF Tuning 97000-60141
- **Assembly, RF detector 97000-60078**
- **Assembly, RF plate ceramic 97000-60133**
- **Connector, coax, BNC bulkhead jack, RU-58 ..... 00004-33000**

RF detector lid housing **97000-20186**
RF detector plate insulator **96000-20048**
RF detector ring shield **97000-20266**
Screw, pan head, Phillips, 6-32 × 3/8-in., stainless steel **00415-63206**
Stud, fine tuning **94011-20107**
Terminal lug, ring, # 6, solder **00007-41500**
Terminal lug, ring, 3/8-in., solder **00007-39500**
Tubing, Teflon, 18 gauge, 0.016-in. wall thickness **00007-94330**

Kit, RF Feedthrough **96000-62024**
O-ring, 1.37-in. ID, 0.103-in. thick, Viton **00107-10400**
Screw, pan head, Phillips, 6-32 × 1/2-in., stainless steel **00415-63208**
RF feedthrough **97000-60169**

Cables

Cable kit, top assembly **97345-60007**
Cord, power, 230 V ac, 15 A, North America **96000-98035**
Cord, power, 230 V ac, 15 A, International **96000-98036**
Cable, System Control PCB - ion gauge - Convectron gauge **97000-63001**
Cable, API front panel - APCI heater **97033-63210**
Cable, Serial I/O PCB - Divert Valve Select PCB (ribbon) **97000-63011**
Cable, System Control PCB - I/O Panel PCB (ribbon) **97000-63013**
Cable, System Control PCB - RF Voltage Control PCB (ribbon) **97000-63015**
Cable, System Control PCB - Conversion Dynode Power Supply PCB (15 kV) - Electron Multiplier Power Supply PCB **97000-63016**
Cable, Electron Multiplier Power Supply PCB - electron multiplier HV connector (top cover plate) (coax) **97000-63017**
Cable, Analyzer PCB - Acquisition DSP PCB (embedded computer) **97000-63018**
Cable, System Control PCB -Analyzer Auxiliary PCB **97044-63030**
Cable, Analyzer Auxiliary PCB - Analyzer PCB - RF Voltage Amplifier PCB (4 cables) **97000-63022**
Cable, Vent Delay PCB - vent valve **97000-63023**
Cable, RF Voltage Amplifier PCB - Low Pass Filter PCB (coax) **97000-63034**
Cable, Low Pass Filter PCB - RF voltage coil connection at front box **97000-63035**
Cable, System Control PCB - Front Panel PCB (ribbon) **97000-63036**
Cable, System Control PCB - Analyzer Auxiliary **97044-63030**
Cable, ground strap, EMI **97044-63040**
Cable, Front Panel PCB - Serial I/O PCB **97044-63050**
Cable, Power Module - internal Ethernet connector - Ethernet PCB (embedded computer) **97000-63040**
Cable, Waveform DDS PCB (embedded computer) - Waveform Amplifier PCB - RF Voltage Amplifier PCB - Analyzer Auxiliary PCB **97000-63041**
Cable, System Control PCB - Control DSP PCB (embedded computer) **97000-63042**
Cable, switching power supply - embedded computer fan - RF Voltage Control PCB fan - interconnect to tower fans **97000-63046**

Cable, RF Voltage Control PCB - RF Voltage Amplifier PCB 97000-63047
Cable, System Control PCB - RF Voltage Amplifier PCB - Waveform DDS PCB (ribbon) 97000-63048
Cable, System Control PCB - Analyzer Auxiliary PCB (ribbon) 97000-63049
Cable, System Control PCB - spray shield - external interconnect 97000-63050
Cable, APCI control, safety interlock 97345-63010

Covers

Cover, Analyzer PCB, small 97000-98033

Cover, Analyzer Auxiliary PCB 97000-10088

Cover, balun, shield 96000-98013

Cover, box, balun 97000-98032

Cover, manifold front, interconnect 97000-40003

Cover, RF Voltage Amplifier PCB 97000-10028

Cover, Waveform Amplifier PCB 97000-10029

Cover, zero box, RF voltage detector 97000-20262

10.2 Data System – Hardware

Kit, Data System, Hardware 97044-62111
Cable, thinwire Ethernet 00012-50969
Connector, T-Connector, thinwire Ethernet 00012-50967
Terminator, thinwire Ethernet 00950-00918

10.3 Chemicals Kit

Kit, Chemicals **97000-62042**
- **Caffeine, 1 mg/mL, in methanol** **00301-12310**
- **Reserpine, 1 gram** **00301-12901**
- **Met-Arg-Phe-Ala (MRFA), solids** **00301-07702**
- **Sample, Met-Arg-Phe-Ala (MRFA), solids, 20 mg each** **40061-60002**

10.4 Accessory Kit

Accessory Kit **97345-62003**
- **Air duct, 1.0-in. ID, flex, blue, 15 ft. (4.5 m) l** **00301-08301**
- **Cable, shielded, 2-twisted pair, 22 gauge, 24 ft. (7 m) l** **00302-01800**
- **Cable, serial, W2690, DB99M-DB9F** **00012-51086**
- **Ferrule, HPLC, 1/16-in. stainless steel, Valco (4 each)** **00101-18122**
- **Ferrule, FingerTight™ 2, Upchurch (3 each)** **00101-18196**
- **Ferrule, Tefzel, 1/16-in., electrospray (2 each)** **00102-10148**
- **Ferrule, 0.008-in. ID, KEL-F, HPLC (4 each)** **00101-18114**
- **Ferrule, 0.016-in. ID, PEEK, HPLC (4 each)** **00101-18120**
- **Fitting, ferrule, 1/8-in., Tefzel (2 each)** **00101-18199**
- **Fitting, ferrule, Swagelok, back, 1/4-in. (2 each)** **00101-04000**
- **Fitting, ferrule, Swagelok, front, 1/4-in. (2 each)** **00101-10000**
- **Fitting, ferrule, Swagelok, front, 1/8-in. (2 each)** **00101-08500**
- **Fitting, ferrule, Swagelok, back, 1/8-in. (2 each)** **00101-02500**
- **Fitting, FingerTight™ 2, Upchurch (2 each)** **00101-18195**
- **Fitting, HPLC union, 0.010-in. orifice, PEEK (2 each)** **00101-18202**
- **Fitting, HPLC, tee, 0.020-in. orifice, PEEK (1 each)** **00101-18204**
- **Fitting, Swagelok, nut, 1/4-in., brass (1 each)** **00101-12500**
- **Fitting, Swagelok, nut, 1/8-in., brass (2 each)** **00101-15500**
- **Fitting, tee, 1-in., barbed (1 each)** **00102-10120**
- **Fuse, 0.16 A, 5 × 20 mm, 250 V, time lag (8 each)** **00006-01700**
- **Fuse, 0.25 A, 5 × 20 mm, 250 V, time lag (2 each)** **00006-11204**
- **Fuse, 0.40 A, 5 × 20 mm, 250 V, time lag (4 each)** **00006-05080**
- **Fuse, 0.50 A, 5 × 20 mm, 250 V, quick acting (2 each)** **00006-07608**
- **Fuse, 1.00 A, 5 × 20 mm, 250 V, quick acting (2 each)** **00006-07610**
- **Fuse, 1.60 A, 5 × 20 mm, 250 V, quick acting (2 each)** **00006-08610**
- **Fuse, 2.50 A, 5 × 20 mm, 250 V, T-F (2 each)** **00006-11202**
- **Fuse, 3.15 A, 5 × 20 mm, 250 V, time lag (4 each)** **00006-10510**
- **Hose, PVC, reinforced, 1.0-in. ID, 1.25-in. OD** **00301-24141**
- **Manual, HPLC troubleshooting (1 each)** **00920-05914**
- **Needle, ESI, D point, 26 gauge, 2-in. long (51 mm) 1 each** **00950-00990**
- **Nut, flangeless, 1/16-in., electrospray (1 pack)** **00102-10146**
- **Nut, 1/16-in., stainless steel, Valco** **00110-16008**
- **O-ring, 0.299-in. ID × 0.103-in. thick, Kalrez** **00107-10059**
- **Pump oil, rotary-vane vacuum pump, 1 L** **00301-15101**
- **Sample loop, 20 µL, stainless steel, Valco** **00301-30000**
- **Seal, ESI needle, 5000 series** **00950-00952**
- **Syringe, 10 µL, Rheodyne (1 each)** **00301-19008**
- **Syringe, 250 µL, Gastight®, removable needle (2 each)** **00301-19015**
- **Syringe, 500 µL Gastight, removable needle (1 each)** **00301-19016**
- **Tube, copper, 1/8-in. OD × 0.030-in. wall, refrigerant, 16.5 ft. (5 m) l** **00301-22701**
- **Tube, hypodermic 26 gauge × 10-in. (254 mm), 304S stainless steel (1 each)** **00106-20005**

Tube, Teflon, 0.030-in. ID × 1/16-in. OD, 1.5 ft. (0.5 m) l 00301-22915
Tubing, 0.25-in. OD × 0.062-in. wall thickness, PFA, 15 ft. (4.5 m) l 00101-50100
Tubing, fused silica, 0.150 mm ID × 0.390 mm OD, 2 ft. (0.6 m) l 00106-10498
Tubing, fused silica, 0.050 mm ID × 0.190 mm OD, 6 ft. (1.8 m) l 00106-10502
Tubing, fused silica, 0.1 mm ID × 0.4 mm OD, deactivated 3 ft. (1 m) 00106-10504
Tubing, fused silica, 0.1 mm ID × 0.190 mm OD, 6 ft. (1.8 m) l 00106-10499
Tubing, PVC, unreinforced, clear, 3/8-in. ID, 10 ft. (3 m) l 00301-22895
Tubing, PEEK, red, 0.005-in. ID × 1/16-in. OD, 5 ft. (1.5 m) l 00301-22912
Wrench, Allen, hex 1/4-in. ball point 00725-00022

10.5 Recommended Spares

Battery, 7.2 V, nickel / cadmium	00301-05720
Bushing, snap, 1.75-in. diameter, white plastic	00201-19081
Dc ring filter box	97000-98004
Fan gasket	97000-20298
Fan, 100 cfm, 24 V dc	00013-00243
Fan, kit	97000-62021
Filter, fan	97000-20299
Finger guard	00007-18600
Fitting, Swagelok, bulkhead-union, 1/8-in. × 1/8-in., stainless steel	00101-02102
Foot, bumper	00007-18115
Fuse, 0.16 A, 5 × 20 mm, 250 V, time lag	00006-01700
Fuse, 0.25 A, 5 × 20 mm, 250 V, time lag	00006-11204
Fuse, 0.40 A, 5 × 20 mm, 250 V, time lag	00006-05080
Fuse, 0.50 A, 5 × 20 mm, 250 V, quick acting	00006-07608
Fuse, 1.00 A, 5 × 20 mm, 250 V, quick acting	00006-07610
Fuse, 1.60 A, 5 × 20 mm, 250 V, quick acting	00006-08610
Fuse, 2.50 A, 5 × 20 mm, 250 V, Type F	00006-11202
Fuse, 3.15 A, 5 × 20 mm, 250 V, time lag	00006-10510
Hinge, open 180 degree	00250-08003
Nut, hex-KEP, 6-32, cadmium plated	00460-16321
Nut, hex-KEP, 8-32, stainless steel	00461-28320
Plug, 1.75-in. diameter, white, nylon	00201-20500
Pump oil, turbomolecular, reservoir, felt, TPH 240	00950-01116
Pump oil, rotary-vane vacuum pump, 1 L	00301-15101
Screw, pan head, Phillips, 6-32 × 1 3/4-in., zinc plated	00405-63228
Screw, pan head, Phillips, 6-32 × 1/2-in., stainless steel	00415-63208
Screw, pan head, Phillips, 6-32 × 1/4-in., stainless steel	00415-63204
Screw, pan head, Phillips, 6-32 × 3/8-in., stainless steel	00415-63206
Screw, pan head, slot, 2-56 × 1/4-in., stainless steel	00414-25604
Screw, pan head, slot, 6-32 × 1/4-in., cadmium plated	00404-63204
Stud, ball, 6-32 × 0.375-in.	00201-12110

Switchcap, manifold cover, interconnect 97000-40009
Switchcap, right door, interconnect 97000-40010
Tubing, Teflon, 18 gauge, 0.016-in. wall thickness 00007-94330
Valve assembly, sheath/aux gas, dual manifold 00110-20014
Washer, flat, #6, stainless steel 00472-00600
Washer, interlock, 5/16-in. ID, stainless steel 00479-04400

10.6 Divert / Inject Valve Accessories

Ferrule, HPLC 1/16-in. stainless steel, Valco 00101-18122

Syringe adapter, 1/16-in. fill port liner / ferrule, Valco 00110-16002

Syringe adapter, 1/16-in. fill port, Valco 00110-16000

Valve, replacement nut, 1/16-in. HPLC, stainless steel 00110-16008

Valve, replacement rotor seal, Valco 00110-16006

Valve, replacement stator, Valco 00110-16004

5 µL sample loop, stainless steel, Valco 00110-16010

20 µL sample loop, stainless steel, Valco 00301-30000

10.7 Optional Tools

Hexdriver, 0.28-in. 00025-01810

Hexdriver, 0.35-in. 00025-08041

Tool pin extractor, AMP, large 00725-00013

Tool pin extractor, AMP, small 00725-00020

Wrench, Allen / hex drive, 1/4-in. (with handle) 00725-00015

Tool, capillary removal 70111-20258

Tool, removal, TEE seal 70005-20304

Index

Symbols

#

A

B

C

D

E

F

G

H

I

K

L

M

N

O

P

Q

R

S

T

V

W

Z